Chapter 22

Subdivision and Land Development

Part 1
Short Title, Purpose, and Jurisdiction

§22-101. Short Title
§22-102. Purpose
§22-103. Authority and Jurisdiction
§22-104. Interpretation
§22-105. County Review
§22-106. Municipal Liability

Part 2
Definitions

§22-201. Definitions

Part 3
Application Procedures and Plat Requirements

§22-301. Pre-application Procedures
§22-302. Sketch Plan
§22-303. Preliminary Plan Procedures
§22-304. Preliminary Plan Requirements
§22-305. Final Plan Procedures
§22-306. Final Plan Requirements
§22-307. Resubdivision Procedure
§22-308. Additions to Existing Lots
§22-309. Commencement and Completion of Construction and Improvements
§22-310. As-Built Plan

Part 4
Design Standards

§22-401. Application of Standards
§22-402. General Standards
§22-403. Street and Highway Standards
§22-404. Off-Street Parking
§22-405. Access Drives
§22-406. Blocks
§22-407. Lots
§22-408. Easements
§22-409. Land Grading Requirements
§22-410. Sewage Disposal Systems
§22-411. Water Supply Systems
§22-412. Water Resources Impact Studies

§22-413. Traffic Impact Studies
§22-414. Landscaping Requirements
§22-415. Recreation Areas/Facilities

Part 5
Improvements and Construction Requirements

§22-501. Monuments and Markers
§22-502. Streets
§22-503. Curbs and Gutters
§22-504. Sidewalks
§22-505. Sewage Disposal and Water Supply Systems
§22-506. Fire Protection
§22-507. Storm Drainage Systems and Stormwater Management
§22-508. Erosion and Sedimentation Control
§22-509. Floodplains
§22-510. Underground Utility Lines
§22-511. Petroleum Lines
§22-512. Natural Gas Lines
§22-513. Provision for Requirement of Lands for Recreation and Other Public Sites
§22-514. Water Areas
§22-515. Reservations
§22-516. Completion of Improvements or Guarantee Thereof; Prerequisite to Final Plan Approval
§22-517. Inspection of Improvements
§22-518. Remedies to Effect Completion of Improvements
§22-519. Dedication and Acceptance of Improvements
§22-520. Maintenance Guarantee

Part 6
Fees

§22-601. Preliminary Plan
§22-602. Final Plan
§22-603. Fees for Review and Implementation of Plan

Part 7
Modifications

§22-701. Modifications
§22-702. Procedure

Part 8
Administration, Enforcement, and Penalties

§22-801. Administration
§22-802. Enforcement and Penalties
§22-803. Appeals

Part 9
Mobile Homes and Mobile Home Parks

§22-901. Definitions
§22-902. Permits for Mobile Home(s) and Mobile Home Park Construction, Alteration, or Extension
§22-903. Compliance of Existing Mobile Home Parks
§22-904. Inspection of Mobile Home Parks
§22-905. Design and Improvement Standards
§22-906. Water Supply
§22-907. Sewage Disposal
§22-908. Electrical Distribution System
§22-909. Service Buildings and Other Community Service Facilities
§22-910. Refuse Handling
§22-911. Insect and Rodent Control
§22-912. Fuel Supply and Storage
§22-913. Fire Protection
§22-914. Single Mobile Homes
§22-915. Responsibilities of the Park Management
§22-916. Guidelines for Rules, Regulations and Agreements Between Mobile Home Park Operators and Tenants
§22-917. Facilities
§22-918. Removal of Mobile Homes
§22-919. Notices and Revocation of License
§22-920. Enforcement and Penalties

Exhibits

Exhibit 22-1 Subdivision and Land Development Plan Procedure
Exhibit 22-2 Application for Subdivision and Land Development
Exhibit 22-3 Typical Curb Detail
Exhibit 22-4 Typical Depressed Curb Detail
Exhibit 22-5 Typical Depressed Curb Detail
Exhibit 22-6 Typical Sidewalk Details
Exhibit 22-7 Typical Sidewalk and Pavement Details
Exhibit 22-8 Typical Cul-de-Sac Details
Exhibit 22-9 Typical Cul-de-Sac Details
Exhibit 22-10 Typical Roadway Details
Exhibit 22-11 Typical Roadway Details
Exhibit 22-12 Typical Roadway Details
Exhibit 22-13 Typical Roadway Details
Exhibit 22-14 Typical Roadway Details

Part 1

Short Title, Purpose, and Jurisdiction

§22-101. Short Title.

This Chapter shall be known and may be cited as the "Reading Township Subdivision and Land Development Ordinance."

(*Ord. 1999-2*, 1/11/1999, §101)

§22-102. Purpose.

It is the intent, purpose, and scope of this Chapter:

A. To protect and promote safety, health and morals.

B. To accomplish coordinated development.

C. To provide for the general welfare by guiding and protecting amenity, convenience, future governmental, economic, practical, and social and cultural facilities, development and growth, as well as the improvement of governmental processes and functions.

D. To guide uses of land and structures, type and location of streets, public grounds and other facilities.

E. To promote the conservation of energy through the use of planning practices and to promote the effective utilization of renewable energy sources.

F. To permit the Township to minimize such problems as may presently exist or which may be foreseen.

(*Ord. 1999-2*, 1/11/1999, §102)

§22-103. Authority and Jurisdiction.

1. The authority of the Township Supervisors to adopt this Chapter regulating subdivision and land development within Reading Township is granted by Article V of the Pennsylvania Municipalities Planning Code of July 31, 1968, Act No. 247 as amended by Act 170 of 1988, 53 P.S. §10501 *et seq*., and as amended thereafter.

2. No subdivision or land development of any lot, tract, or parcel of land shall be made, no streets, sanitary sewer, storm sewer, water main, or other improvements in connection therewith shall be laid out, constructed, opened or dedicated for public use or travel, or for the common use of occupants of buildings abutting thereon, except in accordance with the provisions of this Chapter.

(*Ord. 1999-2*, 1/11/1999, §103)

§22-104. Interpretation.

The provisions of this Chapter shall be interpreted to be the minimum requirements to meet the purposes of the Chapter. Where the provisions of this Chapter conflict or are inconsistent with the provisions of any other ordinance, regulation, or requirement, the more restrictive provisions shall apply. Where other ordinances, regulations or requirements are referenced (either literally or implicitly), the most

recent, as amended, version or edition shall be adhered to.

(*Ord. 1999-2*, 1/11/1999, §104; as amended by *Ord. 2004-4*, 6/14/2004, §V)

§22-105. County Review.

All applications for subdivision and/or land development approval within Reading Township shall be forwarded upon receipt to the Adams County Office of Planning and Development for review and report. Such action shall occur at the preliminary and final plan stages, and the Township shall not take action on said plans until the County report is received or until the expiration of 30 days from the date the plans were forwarded to the County.

(*Ord. 1999-2*, 1/11/1999, §105)

§22-106. Municipal Liability.

The grant of a permit or approval of a subdivision and/or land development plan shall not constitute a representation, guarantee, or warranty of any kind by the liability upon the municipality, its officials, or employees.

(*Ord. 1999-2*, 1/11/1999, §106)

Part 2

Definitions

§22-201. Definitions.

For the purpose of this Chapter, the following words and phrases shall have the meaning as given in this Part:

A. Words in the present tense include the future.

B. The singular includes the plural.

C. The word "shall" is mandatory, the word "may" is optional.

D. The word "person" means an individual, corporation, partnership, firm, association, company, or any other similar entity.

Access drive–every entrance or exit used by vehicular traffic to or from properties abutting a public road. The term includes proposed streets, lanes, alleys, courts, and ways.

Accessory structure–a subordinate structure incidental to and located on the same lot as the principal structure.

Adverse condition–any condition that limits, restricts or otherwise inhibits the use, enjoyment or functionality of a particular facility, tract or feature. [*Ord. 2004-4*]

Agricultural purpose–the use of a tract of land for farming, dairying, pasturage, agriculture, horticulture, floriculture, viticulture, and animal and poultry husbandry and the necessary accessory uses for packing, treating or storing the produce and equipment and for housing and feeding livestock and for housing equipment. The use of land solely for a dwelling site is not an agricultural purpose.

Alley–refer to "streets, minor." [*Ord. 2004-4*]

Applicant–a landowner or developer, as hereinafter defined, who has filed an application for development, including his heirs, successors, and assigns.

Application for development–any application, whether preliminary or final, required to be filed and approved prior to start of construction or development, including but not limited to an application for building permit, or for the approval of a subdivision plat or land development plan.

Authority–a body politic and corporate created pursuant to the act of May 2, 1945 (P.L.382, No. 164) known as the "Municipality Authorities Act of 1945," 53 P.S. §301 *et seq*.

Average daily trip (ADT)–the total volume of traffic during a given time period (in whole days) greater that 1 day and less than 1 year, divided by the number of days in that time period. [*Ord. 2004-4*]

Block–an area bounded by streets.

Borrow area–an area, usually, but not limited to, being located offsite, which serves as a source for obtaining topsoil, fill, or other earthen material for which there is a deficit elsewhere on the project site.

Building–any structure having a roof supported by columns or walls, including covered porches, bay windows, and chimneys and intended for the shelter, housing, or enclosure of persons, animals, or chattels.

Building setback lines–a line within a property designating the minimum distance that must be provided between any building or structure and an adjacent right-of-way line, property line, or street line, whichever shall apply.

Cartway–the surface of a street or road which is improved, designated, or intended for vehicular use. [*Ord. 2004-4*]

Clear sight triangle–an area of unobstructed vision at street intersections defined by lines of sight between points at a given distance from the intersection of the street center lines.

Common open space–a parcel or parcels of land or an area of water, or a combination of land and water within a development site and designed and intended for the use or enjoyment of residents of a development, not including streets, off-street parking areas, and areas set aside for public facilities.

County–the County of Adams, Commonwealth of Pennsylvania.

Coverage–that portion or percentage of a parcel in which the direct infiltration of stormwater runoff into the earth, as covered, is or will be modified and inhibited by materials, structures, facilities, etc. [*Ord. 2004-4*]

Crosswalk–a publicly or privately owned right-of-way for pedestrian use extending from a street into a block or across a block to another street.

Cul-de-sac–a street with access closed at one end, provided with a vehicular turn-around area at the closed end.

Developer–any landowner, agent of such landowner, or tenant with the permission of such landowner, who makes or causes to be made a subdivision or land development.

Development plan–the provisions for development including, but not limited to, a planned residential development or subdivision, all covenants relating to use, location and bulk of buildings and other structures, intensity of use or density of development, streets, ways and parking facilities, common open space and public facilities. The phrase "provisions of the development plan" when used in this Part shall mean the written and graphic materials referred to in this definition.

Drainage–the flow of surface water runoff and the methods of directing such flow which include, but are not limited to: (1) the removal of surface water or groundwater from land by drains, grading, or other means which includes runoff controls to minimize erosion and sedimentation during and after construction; and, (2) the means for preserving the water supply; and, (3) the prevention or alleviation of flooding.

Dwelling–a building or a portion thereof, supported by either a foundation or by blocks or jacks or otherwise permanently attached to land, designed for living quarters for one or more families, but not including hotels, rooming houses, or other accommodations for transient occupancy.

Multiplex (garden apartments)–one or more two-story, multi-family structures not to exceed 16 units. The dwelling units share a common lot area, which is the sum of the required lot areas of all dwelling units within the

building.

Single-family attached (townhouses)–a single-family attached dwelling unit in a row of at least three such units in which each unit has its own front and rear access to the outside, no unit is located over another unit, and each unit is separated from any other unit by one or more vertical common, fire resistant, walls A row of attached townhouses shall not exceed eight dwelling units.

Single-family detached dwellings–a residential structure containing only one dwelling unit.

Single-family semi-detached dwellings (duplex)–a one-family dwelling attached to one other one-family dwelling by a common vertical wall.

Two-family attached–a building on a single lot containing two dwelling units, each of which is totally separated from the other by an unpierced ceiling and floor extending from exterior wall to exterior wall, except for a common stairwell exterior to both units.

Condominium–an ownership arrangement of dwelling units and common elements. A condominium is a unit, which has all of the following characteristics:

(a) The unit (the interior and associated exterior areas designated for private use in the development plan) is owned by the occupant.

(b) The unit may be any permitted dwelling type.

(c) All or a portion of the exterior open space and any community interior spaces are owned and maintained in accordance with the Uniform Condominium Act of Pennsylvania (68 Pa.C.S.A. §3101 *et seq*.) regulations and in accordance with the provisions for open space, roads, or other development features in this Chapter and the Reading Township Zoning Ordinance [Chapter 27].

Residential conversions–an existing building converted into multiple dwelling units.

Dwelling unit–one or more rooms having cooking and sanitary facilities and access directly outdoors or through a common entrance hall. [*Ord. 2004-4*]

Easement, utility–a right-of-way granted for the limited use of land for public or quasipublic purposes, including the placement or installation of utilities; also the land to which such right(s) pertain.

Egress–the exit of vehicular traffic from abutting properties to streets, lanes, alleys, courts and ways. [*Ord. 2004-4*]

Engineering specifications–the written specifications of the municipality as prepared by a registered professional engineer, regulating the installation of any required improvement or for any facility installed by any owner, subject to public use.

Erosion–the removal of surface materials by the action of natural elements.

Excavation–any act by which earth, sand, gravel, rock or any other similar material is dug into, cut, carried, uncovered, removed, displaced, relocated or bulldozed. It shall include the conditions resulting therefrom.

Fill–(1) any act by which earth, sand, gravel, rock or any other material is placed, pushed, dumped, pulled, transported or moved to a new location above the natural surface of the ground or on top of the stripped surface. It shall include the conditions resulting therefrom; (2) the difference in elevation between a point on the original ground and a designated point of higher elevation of the final grade; (3) the material used to make fill.

Flood–

Floodplain–the lands adjoining a river or stream that have been or may be expected to be inundated by flood waters in a 100-year frequency flood.

Flood prone area–a relatively flat or low land area adjoining a stream, river, or watercourse, which is subject to partial or complete inundation; or, any area subject to the unusual and rapid accumulation or runoff of surface waters from any source.

Floodway–the channel of the watercourse and those portions of the adjoining floodplains which are reasonably required to carry and discharge the 100-year frequency flood. Unless otherwise specified, the boundary of the floodway is as indicated on maps and flood insurance studies provided by FEMA. In an area where no FEMA maps or studies have defined the boundary of the 100-year frequency floodway, it is assumed, absent evidence to the contrary, that the floodway extends from the stream to 50 feet from the top of the bank of the stream.

One hundred year flood–the flood magnitude expected to be equaled or exceeded on the average of once in 100 years. It may also be expressed as the flood having a 1 percent chance of being equaled or exceeded in a given year.

Regulatory flood elevation–the 100-year flood elevation, plus a freeboard safety factor of 1½ feet.

Governing Body–the Board of Supervisors of Reading Township, Adams County, Pennsylvania.

Improvement–physical additions and changes to the land that may be necessary to produce usable and desirable lots or a valuable addition to real property amounting to more than repairs or replacement of waste, costing labor or capital and intended to enhance its value, beauty or adapt it to new or further purposes.

Ingress–the entrance of vehicular traffic from streets, lanes, alleys, courts and ways to abutting properties. [*Ord. 2004-4*]

Land development–the improvement of one lot or two or more contiguous lots, tracts, or parcels of land for any purpose involving:

(1) (a) A group of two or more residential or nonresidential buildings, whether proposed initially or cumulatively, or a single nonresidential building on a lot or lots regardless of the number of occupants or tenure.

(b) The division or allocation of land or space, whether initially or cumulatively, between or among two or more existing or prospective occupants by means of, or for the purpose of streets, common areas, leaseholds, condominiums, building groups or other features.

(2) A subdivision of land.

(3) Land development shall not include:

(a) The conversion of an existing single-family detached dwelling or single-family semi-detached dwelling into not more than three residential units, unless such units are intended to be a condominium.

(b) The addition of an accessory building or buildings provided:

1) Such building or buildings will be used exclusively in connection with the agricultural use of the property.

2) The cumulative square footage of ground floor area of the proposed building or buildings and all other buildings is less than 5,000 square feet more than the square footage of all buildings located within such tract, lot, or parcel.

3) The addition of an accessory building or buildings provided:

a) Such building or buildings will not be used exclusively in connection with the agricultural use of the property.

b) The cumulative square footage of ground floor area of the proposed building or buildings and all other buildings is less than 400 square feet more than the square footage of all buildings located within such tract, lot, or parcel.

[*Ord. 2014-01*]

Landowner–the legal or beneficial owner or owners of land including the holder of an option or contract of purchase (whether or not such option or contract is subject to any condition) a lessee, if he is authorized under the lease to exercise the rights of the landowner, or other person having a proprietary interest in land.

Level of service (LOS)–describes the operating conditions of an intersection and is derived by comparing traffic volumes with roadway capacity. LOS A represents the best traffic operation, LOS F represents the worst. [*Ord. 2004-4*]

Lot–a designated parcel, tract or area of land established by a plat or otherwise as permitted by law and to be used, developed or built upon as a unit.

Lot, through or double frontage–a lot with front and rear street frontage.

Lot area–the area contained within the property lines of a lot as shown on a subdivision plan excluding space within any street right-of-way, but including the area of any easement.

Lot, corner–a lot at the junction of and abutting two or more intersecting streets or private roads. Front setback of the applicable zoning district shall be applied along all property lines adjoining streets or roads. Rear setback of the applicable zoning district shall be applied along all other property lines.

Lot, reverse frontage–a lot extending between and having frontage on, an arterial street and a minor street, and with vehicular access solely from the latter.

Lot width–the horizontal distance between the side lines of a lot, measured at right angles to its depth, and where specified as minimum lot width, shall be maintained throughout the entire depth of the lot.

Mediation–a voluntary negotiating process in which parties in a dispute

mutually select a neutral mediator to assist them in jointly exploring and settling their differences, culminating in a written agreement which the parties themselves create and consider acceptable.

Mobile home–a transportable, single-family dwelling intended for permanent occupancy, office or place of assemble contained in one unit, or in two units designed to be joined into one integral unit capable of again being separated for repeated towing; which arrives at a site complete and ready for occupancy except for minor and incidental unpacking and assembly operations and constructed so that it may be used without a permanent foundation.

Mobile home lot–a parcel of land in a mobile home park, improved with the necessary utility connections and other appurtenances necessary for the erection thereon of a single mobile home, which is leased to the occupants of the mobile home erected on the lot.

Mobile home park–a parcel or contiguous parcels of land which has been so designated and improved that it contains two or more mobile home lots for the placement thereon of mobile homes.

Municipal authority–a body politic and corporate created pursuant to the act of May 2, 1945, P.L. 382, No. 164, known as the "Municipal Authorities Act of 1945," 53 P.S. §301 *et seq*.

Municipal Engineer–a professional engineer licensed as such in the Commonwealth of Pennsylvania, duly appointed as the engineer for a municipality, planning agency or joint planning commission.

Open space–a parcel or parcels or an area of water, or a combination of land and water within a development site and designed and intended for the use or enjoyment of residents of a development, not including streets, off-street parking areas, and areas set aside for public facilities. The open space designated within a development area shall not be merely leftover or unusable land. Furthermore, all open space shall not be comprised of more than 10 percent of any one adverse condition (i.e., wetlands, steep slopes, etc.). [*Ord. 2004-4*]

Panhandle lot–a lot that is connected to a public street by a 50foot minimum wide strip of land that is part of the lot, but that is not used in determining the applicable minimum lot area requirement. Panhandle lots shall meet the applicable lot width requirements specified in the applicable Zoning Ordinance [Chapter 27] at the front yard building set back line. The front yard setback shall be measured from the point where the 50-foot wide strip terminates

Plan, sketch–an informal plan, not necessarily to exact scale, indicating existing features of a tract, its surroundings, and the general layout of a proposed subdivision or land development.

Plan, preliminary–a tentative subdivision of land development plan, in lesser detail that the final plan, indicating the approximate proposed layout of a subdivision as a basis for consideration prior to preparation of the final plan.

Plan, final–a complete and exact subdivision or land development plan prepared for official recording as required by statute.

Plat–the map or plan of a subdivision or land development, whether preliminary or final.

Planning Commission–the designated planning agency of the Township of Reading, whose members are appointed by the Township Supervisors.

Public ground(s)–parks, playgrounds, trails, paths and other recreational areas and other public areas and sites for schools, sewage treatment, refuse disposal, and other publicly owned or operated facilities; and publicly owned or operated scenic and historic sights.

Public hearing–a formal meeting held pursuant to public notice by the governing body or planning agency, intended to inform and obtain public comment, prior to taking action in accordance with this Chapter and the Pennsylvania Municipalities Planning Code (PMPC), Act 247, 53 P.S. §10101 *et seq*., as reenacted and amended.

Public meeting–a forum held pursuant to notice under the Act of July 3, 1986 (P.L. 388, No. 84), known as the "Sunshine Act."

Public notice–notice published once each week for 2 successive weeks in a newspaper of general circulation in the municipality. Such notice shall state the time and place of the hearing and the particular nature of the matter to be considered at the hearing. The first publication shall not be more than 30 days and the second notice shall not be less than 7 days from the date of the hearing.

Resubdivision–any replatting or resubdivision of land limited to change in lot lines on an approved final plan or recorded plan.

Right-of-way–a public thoroughfare for vehicular traffic, pedestrian traffic, and/or planting strips, whether designated as a street, highway, thoroughfare, parkway, road, avenue, boulevard, lane, alley or however designated. [*Ord. 2004-4*]

Runoff–the surface water discharge or rate of discharge of a given watershed after a fall of rain or snow that does not enter the soil but runs off of the surface of the land.

Sedimentation–the process by which mineral or organic matter is accumulated or deposited by moving wind, water, or gravity. Once this matter is deposited (or remains suspended in water), it is usually referred to as "sediment."

Sidewalk–a concrete walkway, parallel to and usually separated from the street, constructed solely for use by pedestrians. [*Ord. 2004-4*]

Sight distance–the length of roadway visible to the driver of a passenger vehicle at any given point on the roadway when the view is unobstructed by traffic.

Slope–the face of an embankment or cut section; any ground whose surface makes an angle with the plane of the horizon. Slopes are usually expressed in a percentage based upon vertical difference in feet per 100 feet of horizontal distance.

Street–any street, avenue, boulevard, road, highway, freeway, parkway, lane, alley, viaduct and any other ways used or intended to be used by vehicular traffic or pedestrians whether public or private.

Streets, major–

Arterial street–a major street or highway with fast or heavy traffic of considerable continuity and used primarily as a traffic artery for intercommunications among large areas.

Collector street–a major street or highway which carries traffic from

neighborhood collectors and/or minor streets to abutting collectors and/or arterials. For classification purposes, collector streets shall generally have an ADT greater than 1,000.

Neighborhood collector–a major street or highway which carries traffic from minor streets and/or other neighborhood collectors to abutting neighborhood collector and/or collector streets. For classification purposes, collector streets shall generally have an ADT greater than 500 but less than 1,000.

Streets, minor–

Minor neighborhood street–a street or roadway which primarily collects and conveys traffic from abutting properties and/or streets.

Minor street–a street or roadway used primarily for access to abutting properties. For classification purposes, minor streets shall generally have an ADT less than 200.

Alley–a minor right-of-way privately or publicly owned, used for service to the rear or sides or abutting properties, not intended for general traffic circulation.

[*Ord. 2004-4*]

Structure–any man-made object having an ascertainable stationary location on or in land or water, whether or not affixed to land.

Subdivision–the division or redivision of a lot, tract or parcel of land by any means into two or more lots, tracts, parcels, or other divisions of land including changes in existing lot lines for the purpose, whether immediate or future, of lease, partitioned by the court for distribution to heirs and devisees, transfer of ownership, or building or lot development; provided, however, that the subdivision by lease of land for agricultural purposes into parcels of more than 10 acres, not involving any new street or easement of access or any residential dwelling, shall be exempted.

Substantially completed–where in the judgment of the Supervisors, at least 90 percent (based on the cost of the required improvements for which financial security was posted) of those improvements required as a condition for final approval have been completed in accordance with the approved plan, so that the project will be able to be used, occupied or operated for its intended use.

Surface drainage area–a plan showing all present and proposed grades and facilities for storm water drainage.

Top soil–surface soils and subsurface soils which presumably are fertile soils and soil material ordinarily rich in organic matter or humus debris. Top soil is usually found in the uppermost soil layer called the "A" Horizon.

Township authority–an authority created by the Township Supervisors, responsible for, but not limited to, the construction, operation, and/or maintenance of water storage, and distribution, and/or sewage collection and treatment facilities.

Undeveloped land–any lot, tract, or parcel of land which has not been graded or in any other manner improved or prepared for subdivision or land development or the construction of a building.

Water survey–an inventory of the source, quantity, yield and use of groundwater and surface water resources within a municipality.

Watercourse–a stream of water, river, brook, creek, or a channel of a perceptible extent, with definite bed and banks to confine and conduct continuously or periodically flowing water.

Wetland–those areas that are inundated or saturated by surface or groundwater at a frequency and duration sufficient to support, and that under normal circumstances do support, a prevalence of vegetation typically adapted for life in saturated soil conditions, including swamps, marshes, bogs, and similar areas. The term includes, but is not limited to, wetland areas listed in the State Water Plan, the United States Forest Service Wetlands Inventory of Pennsylvania, the Pennsylvania Coastal Zone Management Plan, and any wetland area designated by a river basin commission.

(*Ord. 1999-2*, 1/11/1999, §201; as amended by *Ord. 2004-4*, 6/14/2004, §XXXIII; and by *Ord. 2014-01*, 4/21/2014)

Part 3

Application Procedures and Plat Requirements

§22-301. Pre-application Procedures.

1. Copies of this Chapter shall be available for review at the Township Building or for purchase by any person seeking information concerning land development and/or subdivision standards and procedures in effect within the Township. Any prospective developer or subdivider may meet with the Township Planning Commission to discuss and review tentative plans and/or provisions of this Chapter.

2. Prior to the final plan submission, the prospective developer must have complied with the planning requirements of the Pennsylvania Sewage Facilities Act, 35 P.S. §750.1 *et seq*., as administered by the Pennsylvania Department of Environmental Protection.

3. Prospective developers shall consult the County Conservation District representative concerning erosion and sediment control, wetlands, and the effect of geologic conditions on the proposed development. At the same time a determination should be made as to whether or not any of the subdivision or development is located in an area subject to flooding. Land that is subject to flooding shall not be platted for residential occupancy or for any other use that may endanger health, life, or property. Such land within a subdivision shall be set aside for such uses as shall not be endangered by periodic or occasional flooding and shall not produce unsatisfactory living conditions.

4. The developer may request that a pre-application meeting be held to discuss specific proposal requirements. Such requests shall be made to the Board of Supervisors in writing.

(*Ord. 1999-2*, 1/11/1999, §301)

§22-302. Sketch Plan.

1. Prior to the submission of a preliminary plan, developers are encouraged to submit a sketch plan to the Township Planning Commission. This will enable the Planning Commission to review the proposal for the factors that may affect the development. Discussions on sketch plans are intended as purely advisory and shall not exempt the developer from any additional requirements of this or any other ordinances affecting the development. The Planning Commission may, at its discretion or when requested by the applicant, submit the sketch plan to the Township Engineer or Solicitor and the County Planning Agency for review and comment in order to provide the developer with more specific written directive.

2. If the sketch plan is reviewed by the Engineer or Solicitor, the applicant shall provide the Township with a deposit in accordance with the fee schedule to cover the cost of such review. A sketch plan should contain the following information at a minimum:

A. Location map.

B. General information concerning any community facilities and/or any other

man-made or natural features that will affect the proposal.

C. Property boundary taken from deeds, tax maps, or other surveys.

D. A sketch of the proposed development drawn at a scale no smaller than 1 inch = 100 feet showing the proposed layout of streets and lots, and other features of the subdivision or development. The sketch plan may also indicate the tentative layout of any proposed utilities or drainage structures.

E. Contours from USGS Quadrangle Map or other source.

F. Soil boundaries as taken from the Adams County Soil Survey Manual.

G. Floodplain as taken from the Flood Insurance Rate Map for Reading Township.

H. A statement indicating the zoning district and appropriate criteria.

I. Name of property owner and all adjoining property owners.

(*Ord. 1999-2*, 1/11/1999, §302)

§22-303. Preliminary Plan Procedures.

In proposed residential developments involving no more than five lots proposing exclusively single-family detached dwellings that will abut an existing public right-of-way and will not require construction of public improvements the submission of a preliminary plan is waived. However, all other applicable requirements and specifications shall remain the same.

A. *Submission of the Preliminary Plan*.

(1) In conjunction with the submittal of the plan, an application must be completed and signed. This must include supplementary data, application fees and a deposit of required fees for engineering and legal review, as required by the ordinance preliminary plans and all required accompanying documentation shall be submitted to the Township a minimum of 15 business days in advance of the regularly scheduled Planning Commission meeting in which the applicant wishes to review the plan.

(2) All plans will undergo an initial staff review before being considered as a complete submission. During this initial review, plans will not be released to Planning Commission members for formal review. In the event that the application is deemed incomplete, the Township shall notify the applicant, in writing, within 10 business days of its receipt of the application. Should the applicant fail to provide a written withdraw of the submission, or fail to provide missing items, in either event by the day the agenda closes for the next meeting of the Board of Supervisors, the Township Secretary shall place the matter on the agenda for that meeting, at which time consideration shall be given to deny approval of the plan under the relevant authority of this Chapter and the Pennsylvania Municipalities Planning Code. A complete submission shall consist of the specified number of copies of plans, reports and applications including the following items (where required by ordinance):

(a) Completed application form (provided by Township) signed by owner or owner's agent.

(b) Eight blue-line or black-line paper prints of the preliminary plan

showing all the information required in §22-304 of this Chapter.

(c) Four copies of all other required documentation including, but not limited to, Stormwater Management Report, Sewage Facilities Planning Module, Erosion Control Plan and Calculations, and Wetlands Delineation Report.

(d) A filing/application fee as established in Part 6 of this Chapter.

(3) Approval of the preliminary plan constitutes approval of the proposed subdivision or land development with respect to the layout, general design, the approximate dimensions and other planned features. Preliminary approval binds the developer to the general scheme of the plan as approved. Preliminary approval does not authorize the recording, sale or transfer of lots, or the installation of improvements. Preliminary plan approval also does not constitute final approval of the design of improvements as required by the Chapter.

[*Ord. 2004-4*]

B. *Action on Preliminary Plan by the Planning Commission*. The Township Planning Commission may perform the following:

(1) Review all applicable reports from the County Planning Department, Township Engineer, Township Planning Consultant, appropriate Water and/or Sewer Authority, Pennsylvania Department of Transportation, Soil Conservation District, and other reviewing agencies.

(2) Discuss the submission with the applicant.

(3) Recommend revisions so that the plan will conform to Townships ordinances; The Township Planning Commission shall perform the following:

(a) Determine whether the preliminary plan meets the requirements of this Chapter, and other ordinances of the Township.

(b) Recommend approval or disapproval of the preliminary plan to the Board of Supervisors. In the case of a recommended disapproval, the Planning Commission shall indicate the specific deficiencies and the Chapter provisions which have not been met.

C. *Action on Preliminary Plan by the Board of Supervisors*.

(1) Following receipt of the written decision (meeting minutes) from the Township Planning Commission, the Board of Supervisors shall consider the preliminary plan at their next regularly scheduled or special meeting. If the plan is to be considered at a special meeting, the developer shall be so notified, and in addition, the Board of Supervisors may also schedule a public hearing, pursuant to public notice, before taking any action on the plan.

(2) Action on a preliminary plan shall be taken by the Board of Supervisors not later than 90 days following the date of the regular meeting of the Township Planning Commission, next following the date that a complete application is filed, or after a final order of the court remanding an application, provided that should the said next regular meeting occur more than 30 days following the filing of a complete application, or the final order of the court, the said 90-day period shall be measured from the 30th day following the day the

complete application has been filed. [*Ord. 2004-4*]

In their review, the Board of Supervisors shall consider the reports and recommendations of the Township Planning Commission and the various other individuals or agencies to whom the plan was sent for review and comment. As a result of their review, the Board of Supervisors may require or recommend such changes and modifications as they shall deem necessary or advisable in the public interest. [*Ord. 2004-4*]

(3) The decision of the Board of Supervisors concerning the plan shall be in writing and shall be communicated to the developer not later than 15 days following the meeting at which the decision is made.

If a plan is not approved, or approved subject to certain conditions, the written decision shall specify the defects and describe the requirements which have not been met, citing in each instance the applicable provisions of this Chapter.

(4) Failure of the Board of Supervisors to render a decision and communicate it to the developer within the time and in the manner required in this Chapter shall be deemed an approval of the application in terms as presented unless the developer has agreed, in writing, to an extension of time or change in a prescribed manner or presentation of communication of the decision, in which case, failure to meet the extended time or change in manner of presentation of communication shall have like effect.

(5) Approval of the preliminary plan shall not constitute approval of the final plan for any purpose or reason, but shall constitute conditional approval of the proposed development as to its general character and layout. It shall not constitute final approval of design of required improvements or utilities.

(6) When a preliminary plan has been approved or approved subject to certain conditions acceptable to the developer, no subsequent change or amendment in this or any other applicable ordinances shall be applied to affect adversely the right of the developer to commence and to complete any aspect of the approved development within 5 years from such approval.

Where final approval is preceded by preliminary approval, the 5-year period shall be counted from the date of the preliminary approval. In the case of any doubt as to the terms of a preliminary approval, the terms shall be construed in the light of the provisions of the governing ordinances or plans as they stood at the time when the plan for such approval was duly submitted to the Township.

(7) In lieu of disapproving a plan the Board of Supervisors may approve the preliminary plan subject to conditions acceptable to the applicant. Where a plan is conditionally approved the written decision shall state the conditions of approval along with any applicable time limits for satisfaction of conditions. When a conditional approval is granted and a written decision is provided to the applicant, the applicant shall have 7 business days from the date of the decision to notify the Township that the conditions are not acceptable.

In the event that the applicant notifies the Township that the conditions are unacceptable, the approval of the plan will automatically be rescinded and

the plan is considered to be disapproved.

(8) When the applicant revises the plan to an extent which the Township determines to be a major revision (i.e., street layout, design or layout changes in utilities, lot changes, lot revisions, etc.), or if unauthorized revisions are made, the 90-day review period shall automatically be restarted and shall begin with the date of the Planning Commission meeting following the re-submittal or 30 days after re-submittal, whichever shall come first.

D. *Zoning Review*.

(1) All land development and subdivision plans must be submitted to the Reading Township Zoning Officer or designated official responsible for zoning review.

Preliminary plan approval will not be granted prior to receipt of proof of conformance to the Zoning Ordinance [Chapter 27] as it relates to the preliminary plan.

(2) Building Permits will not be issued until a zoning permit is obtained from the Reading Township Zoning Officer or designated official responsible for zoning review.

E. *Provision for Additional Review*. Where deemed in the best interest of Township planning the Board may solicit the review and comment of additional agencies and public services such as the appropriate fire department, emergency management agency, school district, PennDOT, etc. Copies of such review shall be made available to the developer.

(*Ord. 1999-2*, 1/11/1999, §303; as amended by *Ord. 2004-4*, 6/14/2004, §§I, II)

§22-304. Preliminary Plan Requirements.

The preliminary plan submission shall be prepared by a registered surveyor or engineer and be drawn on reproducible stable transparency, using black ink for all data including approval signatures. Scale shall be no less than 1 inch = 50 feet unless otherwise approved by the Township Engineer.

Such plats and surveys shall be prepared in accordance with Act of May 23, 1945, (P.L. 913, No. 367), known as the Engineer, Land Surveyor and Geologist Registration Law.

The foregoing requirements shall not preclude the preparation of a plat in accordance with the Act of January 24, 1966 (1965 P.L. 1527, No. 535, known as the Landscape Architects' Registration Law, when it is appropriate to prepare the plat using professional services as set forth in the definition of the "practice of landscape architecture" under §2 of that Act.

A. *Information Required*. The preliminary plan shall show:

(1) Name of proposed subdivision, and of the municipality in which it is located.

(2) Name, address and telephone number of the subdivider.

(3) Name, address, telephone number, license number and seal of the professional engineer, or registered surveyor who prepared the drawings.

(4) Date of origin and of each subsequent revised submission.

(5) True or magnetic north point.

(6) Graphic scale.

(7) Written scale.

(8) Certification by professional engineer or surveyor that depicted topography is field surveyed for all instances where grading activities and/or public improvements are proposed. Subdivision plans that do not propose public improvements may utilize USGS quadrangle mapping or County GIS/Aerial topography as provided by the Adams County Mapping office. [*Ord. 2004-4*]

(9) A key map, for the purpose of locating the property being subdivided, drawn at a scale of 1 inch equals 2,000 feet and showing the relation of the property to adjoining property and to all streets, roads, municipal boundaries and recorded subdivision plans existing within 1,000 feet of any part of the property. In addition, a title, scale, and north point shall be indicated.

(10) The total tract boundary lines of the area being subdivided showing distances to hundredth of a foot and bearings to one second. These boundaries shall be determined by accurate survey in the field, which shall close with an error of closure not to exceed 1 foot in 10,000 feet before adjustment; provided, however, that the boundary(s) adjoining additional un-platted land of the subdivider (for example, between separately submitted final plan sections) are not required to be based upon field survey, and may be calculated. The location and elevation of all boundary line (perimeter) monuments shall be indicated, along with a statement of the total area of the property being subdivided. In addition, the engineer or surveyor shall certify to the placement of the monuments.

(11) A plot drawn to a legible scale showing the entire existing tract boundary and the location of the lots being subdivided from said tract.

(12) Boundaries of adjacent properties and recorded name and deed reference. When adjacent properties are part of a recorded plat only the lot number and subdivision name need be shown.

(13) Contour lines at vertical intervals of no more than 2 feet for land with average natural slope of 4 percent or less, and at intervals of no more than 5 feet for land with average slope exceeding 4 percent. Contour intervals of 1 foot are required for utility and drainage plans.

(14) Location and elevation of the bench mark(s) to which contour elevations refer; sea level datum used shall be based on USGS mean.

(15) The name (or number), cartway width and right-of-way width and lines of all proposed and existing public streets and the name and location of all other roads within the property.

(16) A certification of ownership, acknowledgment of the plan and offer of dedication (where applicable) shall be signed by the owner(s) and notarized.

(17) Location of existing streets and alleys adjoining the tract including name, width, width of cartway, and sidewalks.

(18) The location (and elevation, if established) of all existing and proposed

street monuments.

(19) Location of existing and proposed rights-of-way and easements.

(20) Lot numbers and a statement of the total number of lots and parcels.

(21) Lot lines, areas with dimensions.

(22) The building setback lines for each lot, or other sites.

(23) For developments where on-site sewage disposal systems will be used, the location where the soils evaluation test was conducted for each lot.

(24) A statement of the intended use of all lots including reference to zoning districts, with reference to restrictions of any type which exist or will exist as covenants in the deed for the lots contained in the subdivision.

(25) Location and size of existing and proposed utility structures and/or transmission lines including water, gas, electric, petroleum, etc. , and all easements or rights-of-way connected with such structures and/or lines.

(26) The location of any existing bodies of water or watercourses, tree masses, buildings or structures (including the location of wells, springs, and on-site sewage facilities for such buildings or structures), public facilities and any other man-made or natural features within or near the proposed subdivision.

(27) Location, size and invert elevation of all existing and proposed sanitary sewers (including any and all proposed and/or existing capped sewer lines) and location of all manholes.

(28) Location, size, and invert elevation of all existing and proposed storm sewers (and other drainage facilities), with the size and material of each indicated, and any proposed connections with existing facilities.

(29) Location of drainage structures, including marshes, ponds, streams, or similar conditions.

(30) Parks, playgrounds and other areas to be dedicated or reserved for public use, with any conditions governing such use.

(31) Where the development lies partially or completely in any flood-prone area, or where the development borders on any flood-prone area, the preliminary plan map shall include detailed information giving the location and elevation of proposed roads, public utilities and building sites. All such maps shall identify accurately the boundaries of the flood-prone area.

(32) All plans for property on which hydric soils exist shall provide a report, prepared by a qualified wetland delineator (subject to approval by the Township), indicating the absence or presence of wetlands on-site. If wetlands are present, a recognized professional with specific expertise in this type of survey shall perform a field delineation of existing wetland boundaries. In both cases, a note shall be added to all plans that states that Reading Township, its agents and/or employees assume no liability with regards to wetland analyses and delineations. [*Ord. 2004-4*]

(33) Reference to deed book and page number for property being developed.

(34) No plat which requires access to a highway under the jurisdiction of the Pennsylvania Department of Transportation shall be approved unless the

plat contains a notice that a Highway Occupancy Permit is required pursuant to §420 of the Act of June 1, 1945 (P.L. 1242, No. 428), known as the State Highway Law, before driveway access to a state highway is permitted. The plat shall be marked to indicate that access to the State highway shall be only as authorized by a Highway Occupancy Permit.

(36) All plans shall include the soil types and boundaries located on the subject tract. Boundaries and soil data shall be taken from the County Soil Survey. [*Ord. 2004-4*]

(37) All existing features, structures, formations and the like shall be clearly depicted, labeled and dimensioned (where appropriate).

B. *Supplementary Data Required*. The preliminary plan shall be accompanied by the following supplementary data where applicable and determined by the Township to be necessary:

(1) A planning module for land development as required by the Pennsylvania Department of Environmental Protection (PADEP). For projects involving proposed public sewer extensions or central sewer facilities, the planning module when deemed to be necessary must be submitted to the appropriate Municipal Authority for review. The preliminary plan will not be approved until the planning module has been approved by the Pennsylvania Department of Environmental Protection.

(2) A plan for the control of erosion and sedimentation for review by the County Conservation District Office as required by the Pennsylvania Clean Streams Act. The plan shall also indicate if any borrow/spoil areas are proposed in which case the plan shall include Erosion and Sediment Control provisions for each such borrow area.

Preliminary plan will not be approved until a copy of the adequacy letter from the Adams County Conservation District has been submitted.

(3) Final designs of any bridges or culverts which may be required. Such designs shall meet all applicable requirements of the Pennsylvania Department of Environmental Protection and the Pennsylvania Department of Transportation. Where facilities will be offered for dedication, the Township shall also review and approve the design.

(4) Typical street cross-section drawings for all proposed streets.

(5) Final profiles along the centerline of the cartway (pavement) or along the top of the curb for both sides of each proposed street shown on the preliminary plan. Such profiles shall show natural and finished grades and utilities which are existing or proposed to be located beneath the roadway surface.

(6) The applicant shall, if requested by the Township, submit a Water Supply Feasibility Report in accordance with the requirements of this Chapter concerning the availability of, impact to and adequacy of water supply facilities in or near the proposed subdivision and/or land development. [*Ord. 2004-4*]

(7) Stormwater management plan and calculations including design of storm sewers in accordance with §§22-414 and 22-507.

(8) Where the preliminary plan covers only a part of the entire land-

holdings, a sketch of the future street system of the unsubmitted part.

(9) Where the land included in the subject application has an electric transmission line, a gas pipeline, or a petroleum (or petroleum products) transmission line located within the tract, the application shall be accompanied by a letter from the owner or lessee of such right-of-way stating any conditions on the use of the land and the minimum building setback and/or right-of-way lines. This requirement may also be satisfied by submitting a copy of the recorded agreement.

(10) Where determined to be necessary by the Township, the developer shall submit a traffic impact study in accordance with Township standards.

(11) Design of sanitary sewer and water systems, including plan and profiles. Where applicable, design of sanitary sewer and water systems shall be submitted to the appropriate Municipal Authority for review and approval.

Where deemed necessary, approval will not be granted until a letter from the applicable Municipal Authority or signature on the plan by the Authority is received.

(12) A land grading plan in accordance with the requirements of this Chapter.

(13) A listing of underground utilities and contact information as per PA Act 287, 172 and 38 as may be amended (Pennsylvania One Call System).

(14) Location and general layout of any proposed recreational facilities.

(15) An offer of dedication shall be shown on the plan identifying which improvements are intended to be dedicated to the Township or applicable Municipal Authority.

(16) A letter or agreement from the applicable authority or agency approving the sanitary sewer and water facilities.

(17) Whenever a land development plan proposes to dispose stormwater runoff to an adjacent property not within a natural watercourse or in a manner which exceeds the capability of a natural water course, a letter shall be obtained from the affected property owners stating their approval of the proposal after they have reviewed the required stormwater management plan. If deemed necessary, a formal easement and agreement may be required from the affected property owners.

(18) Landscaping plan in accordance with the requirements of this Chapter.

(19) Where access will be to a Township Road, the plan shall identify the location of a proposed access drive(s), and sight distance(s) which are adequate to demonstrate that the site can be served with an access.

(20) Traffic control devices, as may be required. This shall include necessary engineering studies to justify such devices. All Traffic Impact Studies shall be prepared in accordance with §22-413.

(21) A review letter from the Adams County Office of Planning and Development reviewing and commenting on the proposed subdivision and/or land development. [*Ord. 2004-4*]

(*Ord. 1999-2*, 1/11/1999, §304; as amended by *Ord. 2004-4*, 6/14/2004, §§VII, VIII)

§22-305. Final Plan Procedures.

Submission of a final plan for approval by the Township shall occur not more than 5 years following the date of approval of the preliminary plan. Failure to submit the final plan within this period of time shall make the approval of the preliminary plan null and void.

Except for any modifications or changes required by the Township, the final plan shall conform basically to the approved preliminary plan. Where significant modifications or changes, other than those required by the Township, are made to an approved preliminary plan, the plan shall be submitted again as a preliminary plan.

A. *Submission of the Final Plan*.

(1) In conjunction with the submittal of the plan, an application must be completed and signed. This must include supplementary data, application fees and a deposit of required fees for engineering and legal review, as required by the Chapter final plans and all required accompanying documentation shall be submitted to the Township a minimum of 15 business days in advance of the regularly scheduled Planning Commission meeting in which the applicant wishes to review the plan.

(2) All plans will undergo an initial staff review before being considered as a complete submission. During this initial review, plans will not be released to Planning Commission members for formal review. In the event that the application is deemed incomplete, the Township shall notify the applicant, in writing, within 10 business days of its receipt of the application. Should the applicant fail to provide a written withdraw of the submission, or fail to provide missing items, in either event by the day the agenda closes for the next meeting of the Board of Supervisors, the Township Secretary shall place the matter on the agenda for that meeting, at which time consideration shall be given to deny approval of the plan under the relevant authority of this Chapter and the Pennsylvania Municipalities Planning Code. A complete submission shall consist of the specified number of copies of plans, reports and applications including the following items (where required by ordinance):

(a) Completed application form (provided by Township) signed by owner or owner's agent.

(b) Eight blue-line or black-line paper prints of the final plan showing all the information required in §22-306 of this Chapter.

(c) Four copies of all other required documentation including, but not limited to, Stormwater Management Report, Sewage Facilities Planning Module, Erosion Control Plan and Calculations and Wetlands Delineation Report.

(d) A filing/application fee as established in Part 6 of this Chapter.

[*Ord. 2004-4*]

B. *Action on Final Plan by the Planning Commission*. Action on the final plan shall be taken in the same manner as for preliminary plans. In addition, if a final plan is approved, the Planning Commission Chairman and Secretary shall sign the

record plan and all prints and forward all but one print to the Board of Supervisors along with a copy of their written decision as it appears in the meeting minutes.

C. *Action on the Final Plan by the Board of Supervisors*.

(1) Following receipt of the written decision in the form of meeting minutes from the Planning Commission, the Board of Supervisors shall consider the plan at their next regularly scheduled or special meeting, the developer shall be notified, and in addition, the Board of Supervisors may also schedule a public hearing pursuant to public notice before taking any action on the plan.

(2) Action on a final plan shall be taken by the Board of Supervisors not later than 90 days following the date of the regular meeting of the Township Planning Commission, next following the date that a complete application is filed, or after a final order of the court remanding an application, provided that should the said next regular meeting occur more than 30 days following the filing of a complete application, or the final order of the court, the said 90-day period shall be measured from the 30th day following the day the complete application has been filed. [*Ord. 2004-4*]

In their review, the Board of Supervisors shall consider the reports and recommendations of the Township Planning Commission and the various other individuals or agencies to whom the plan was sent for review and comment. As a result of their review, the Board of Supervisors may require or recommend such changes and modifications as they shall deem necessary or advisable in the public interest. [*Ord. 2004-4*]

(3) The decision of the Board of Supervisors concerning the plan shall be in writing and shall be communicated to the developer not later than 15 days following the meeting at which the decision is made. If a plan is not approved, or approved subject to certain conditions, the written decision shall specify the defects and describe the requirements which have not been met, citing in each instance the applicable provisions of this Chapter.

(4) Failure of the Board of Supervisors to render a decision and communicate it to the developer within the time and in the manner required by this Chapter shall be deemed an approval of the plan in terms as presented unless the developer has agreed to an extension of time.

(5) Before any final plan is approved, the developer shall either install all the required improvements in accordance with the plans or shall provide for deposit with the Township a corporate bond or other security acceptable to the Township in the amount of 110 percent of the cost of such improvements as estimated by the Township Engineer in accordance with the procedure outlined in this Chapter. Such bond or security shall provide for the completion of all required improvements within a stated period which shall not be longer than 2 years from the date of approval of the final plan or as otherwise stipulated in the land development agreement. [*Ord. 2004-4*]

The applicant shall not be required to provide financial security for the costs of any improvements for which financial security is required by and provided to the Department of Transportation in connection with the issuance of a highway occupancy permit pursuant to §420 of the Act of June 1, 1945

(P.L. 1242, No. 428) known as the "State Highway Law." [*Ord. 2004-4*]

D. *Recording of Plan*.

(1) Upon approval of a final plan, by the Township, the developer shall record the approved final plan (and other documentation required under plan approval) in the Adams County Recorder's office, within 90 days of such final approval, or the date the approval of the Township is noted on the plan, which ever is later. No plan shall be recorded unless it officially notes the approval of the Township and review by the Adams County Planning and Development or other County designated agency. [*Ord. 2004-4*]

(2) If the plan is not recorded within 90 days the approval by the Township shall be null and void unless an extension of time is granted by the Board of Supervisors upon request from the developer.

(3) After the Plan has been recorded, a copy of the record plan and Recorder's Certificate shall be submitted to the Board of Supervisors. This shall be required prior to issuance of any applicable licenses or building permits.

(4) No land in a development shall be sold or transferred prior to recording of the final plan.

(5) Where required by the Township, the developer shall submit one reproducible mylar copy and three blueprint or paper copies of the approved and signed final plan to the Township for their records.

F. *Limitations of Final Plan Approval*. The approval of the final plan by the Township shall be deemed as an acceptance of the plan and shall authorize the Recorder of Deeds to record the plan, but shall not impose any duty upon the Township concerning maintenance of improvements or other portions of the same until said Township shall have accepted the same by the dedication for public use.

(*Ord. 1999-2*, 1/11/1999, §305; as amended by *Ord. 2004-4*, 6/14/2004, §§IV, VI, IX)

§22-306. Final Plan Requirements.

The final plan submission shall be prepared by a registered surveyor or engineer and shall be drawn on reproducible stable transparency, using black ink for all data including approval signatures.

Scale shall be no less than 1 inch = 50 feet unless otherwise approved by the Township Engineer.

A. *Information Required*. In addition to the information required in §22-304, the final plan shall show:

(1) Name of proposed subdivision, and the municipality in which it is located.

(2) Name, address, and telephone number of the subdivider.

(3) Name, address, and telephone number, license number, and seal of the professional engineer or registered surveyor who prepared the drawings.

(4) Date of the origin and of each subsequent revised submission.

(5) True or magnetic north point.

(6) Graphic scale.

(7) Written scale.

(8) Certification by professional engineer or surveyor that depicted topography is field surveyed for all instances where grading activities and/or public improvements are proposed. Subdivision plans that do not propose public improvements may utilize USGS quadrangle mapping or County GIS/Aerial topography as provided by the Adams County Mapping office. [*Ord. 2004-4*]

(9) A key map, for the purpose of locating the property being subdivided drawn at a scale of 1 inch equals 2,000 feet and showing the relation of the property to adjoining property and to all streets, roads, municipal boundaries and recorded subdivision plans existing within 1,000 feet of any part of the property. In addition, a title, scale, and north point shall be indicated.

(10) The total tract boundary lines of the area being subdivided showing distances to one hundredth of a foot and bearings to one second. These boundaries shall be determined by accurate survey in the field, which shall close with an error of closure not to exceed 1 foot in 10,000 feet before adjustment; provided, however, that the boundary(s) adjoining additional unplatted land of the subdivider (for example, between separately submitted final plan sections) are not required to be based upon field survey, and may be calculated. The location and elevation of all boundary line (perimeter) monuments shall be indicated, along with a statement of the total area of the property being subdivided. In addition, the engineer or surveyor shall certify to the accuracy of the survey, the drawn plan, and the placement of the monuments.

(11) A plot drawn to a legible scale showing the entire existing tract boundary and the location of the lots being subdivided from the said tract.

(12) Boundaries of adjacent properties and recorded name and deed reference. When adjacent properties are part of a recorded plan, only the lot number and subdivision name need be shown.

(13) Contour lines at vertical intervals of no more than 2 feet for land with average natural slope of 4 percent or less, and at intervals of no more than 5 feet for land with average slope exceeding 4 percent. Contour intervals of 1 foot are required for utility and drainage plans.

(14) Location and elevation of the bench mark(s) to which contour elevations refer. Datum used shall be based on USGS mean sea level.

(15) The name (or number), cartway width, right-of-way width, and lines of all proposed and existing public streets and the name and location of all other roads within the property.

(16) The following data for the cartway edges (curb lines) and right-of-way lines of all recorded (except those which are to be vacated) and/or proposed streets, and for the right-of-way lines of all existing streets, within the property:

(a) The length (in feet and hundredths of a foot) of all straight lines and of the radius and the arc (or chord) of all curved lines (including

curved lot lines).

(b) The width (in feet) of the cartway, right-of-way and, if required, of the ultimate right-of-way, and (in degrees, minutes, and quarters of a minute) of the delta angle of all curved lines, including curved lot lines.

(c) All straight lot lines, defined (in feet and hundredths of a foot) by distances and (in degrees, minutes, and seconds) either by magnetic bearings or by angles of deflection from other lot and street lines.

(17) If a subdivision proposes a new street intersection with a State Legislative Route, the highway occupancy permit number(s) shall be indicated for all such intersections (if available). If a permit has not yet been obtained, the plan must contain a note that requires a Highway Occupancy Permit be obtained in accordance with the State Highway Law.

(18) Location of existing streets and alleys adjoining the tract including name, width of cartway, and sidewalks.

(19) The location (and elevation, if established) of all existing and proposed street monuments.

(20) Location of existing and proposed right-of-ways and easements.

(21) Lot numbers and a statement of the total number of lots and parcels.

(22) The building setback lines for each lot, or other sites.

(23) For developments where on-site sewage disposal systems will be used, the location where the soils evaluation testing was conducted for each lot.

(24) A statement of the intended use of all lots, with reference to restrictions of any type which exist or will exist as covenants in the deed for the lots contained in the subdivision and, if recorded, including the book and page number.

(25) Location and size of existing and proposed utility structures and/or transmission lines including water, gas, electric, petroleum, etc., and all easements or rights-of-way connected with such structures and/or lines.

(26) The location of any existing bodies of water or watercourses, tree masses, buildings or structures (including the location of wells and on-site sewage facilities for such buildings or structures), public facilities and any other man-made or natural features within or near the proposed subdivision.

(27) A certification of ownership, acknowledgment of a plan and offer of dedication shall be signed by the owner(s) and notarized.

(28) An approval block for the use of the Township Supervisors and the Township and County Planning Commissions.

(29) Traffic control devices, as may be required. This shall include necessary engineering studies to justify such devices.

(30) All plans for property on which hydric soils exist shall provide a report, prepared by a qualified wetland delineator (subject to approval by the Township), indicating the absence or presence of wetlands on-site. If wetlands are present, a recognized professional with specific expertise in this type of survey shall perform a field delineation of existing wetland boundaries. In both cases, a note shall be added to all plans that states that Reading Township, its

agents and/or employees assume no liability with regards to wetland analyses and delineations. [*Ord. 2004-4*]

B. *Supplementary Data Required*. Unless previously submitted, the final plan shall be accompanied by the following supplementary data where applicable:

(1) Typical street cross-section drawing(s) for all proposed streets. Cross-section drawing(s) may be shown either on the final plan or on the profile sheets.

(2) Profile sheets for all proposed streets within the development per requirements for preliminary plan.

(3) An agreement that the applicant will install all underground utilities before paving streets or constructing sidewalks This shall be so noted on the plan.

(4) Copies of permits for sewer, water, stormwater, transportation, and erosion control facilities.

(5) Where the final plan covers only a part of the entire land holdings, a sketch of the future street system of the un-submitted part shall be furnished. The street system of the submitted part will be considered in the light of adjustments and connections with future streets in the part not submitted.

(6) Water and sewer feasibility reports as may be required including any updated information which may have become available since the submission of the preliminary plan.

(7) A copy of the approved Erosion and Sedimentation Control Plan.

(8) A copy of the approved Stormwater Management Plan.

(9) Where deemed necessary by the Township, a map showing the location of the proposed development with respect to the Township's flood-prone area, including information in the regulatory flood elevation, the boundaries of the flood-prone areas, proposed lots and sites, fills, flood or erosion protection facilities, and areas subject to special restrictions. In addition, where the proposed development lies partially or completely in any flood-prone area, or border on any flood-prone area, such map shall also show the location and elevation of proposed roads, public utilities, and building sites.

(10) A copy of the approved Sewage Planning Module for land development as approved by the Pennsylvania Department of Environmental Protection.

(11) Such private deed restrictions, including building setback lines, as may be imposed upon the property as a condition of sale, together with a statement of any restrictions previously imposed which may affect the title of the land being subdivided.

(12) Any other certificates, affidavits, endorsements or dedications, etc., that may be required by the Planning Commission or Board of Supervisors.

(13) An affidavit to the effect that all affected municipalities have been notified of any alteration and/or relocation of any watercourse.

(14) A note shall be placed on the drawing indicating that a copy of the approval from the PA Department of Labor and Industry, where applicable shall be provided before a building permit is issued.

(15) The applicant shall, if requested by the Township, submit a Water Supply Feasibility Report in accordance with the requirements of this Chapter concerning the availability, impact and adequacy of water supply facilities in or near the proposed subdivision and/or land development. [*Ord. 2004-4*]

(16) Whenever, it is determined that a subdivision or land development increases the volume, rate, or concentration of stormwater runoff onto an adjacent property not in a natural watercourse or in a manner which exceeds the capacity of the natural watercourse, the developer shall obtain a letter from the adjacent land owner stating his or her approval of the proposal and that they have reviewed the plans and any required stormwater management plan.

(17) Soil boundaries from Adams County Soil Survey.

(18) Where required by the Township, land development agreement(s) shall be executed. A land development agreement is required where there will be dedication of improvements to the Township or under the circumstances where deemed to be necessary for the implementation of plan approval. Details and provisions of such agreement shall be as recommended by the Township's Solicitor and Engineer.

(19) A review letter from the Adams County Office of Planning and Development reviewing and commenting on the proposed subdivision and/or land development. [*Ord. 2004-4*]

(*Ord. 1999-2*, 1/11/1999, §306; as amended by *Ord. 2004-4*, 6/14/2004, §§X, XI)

§22-307. Resubdivision Procedure.

Any replatting or resubdivision, including changes to a recorded plan, shall be considered as a new application, and shall comply with all requirements of this Chapter.

(*Ord. 1999-2*, 1/11/1999, §307)

§22-308. Additions to Existing Lots.

A parcel of land may be added to an existing recorded lot for the sole purpose of increasing the lot size provided that:

A. The parcel to be added must be contiguous to the existing lot.

B. The addition must maintain or improve the overall straightness of the lot lines.

C. The plan prepared for the addition of this parcel shall follow the procedures outlined in this Chapter.

D. The applicant shall record in the Miscellaneous Docket in the Recorder of Deeds Office of Adams County a memorandum that both parcels shall be considered as one single tract for the purposes of subdivision.

E. An acknowledgement/concurrence block shall be provided for the recipient of the additional lot area to provide a notarized signature. [*Ord. 2004-4*]

(*Ord. 1999-2*, 1/11/1999, §308; as amended by *Ord. 2004-4*, 6/14/2004, §XII)

§22-309. Commencement and Completion of Construction and Improvements.

1. No construction shall be commenced until the following applicable items have been addressed to the satisfaction of the Township.

A. Plan approval; security agreement; developers or land development agreements; along with any other Township permits.

2. No construction shall be commenced until the applicant files with the Township all permits, approvals, clearances and the like from government agencies (such as those from the Pennsylvania Department of Environmental Protection, the Pennsylvania Department of Transportation, and/or the Township) authorities and companies which may provide water supply or sewage disposal facilities pipeline easement holders or others.

3. The applicant shall commence construction of improvements within 1 year from the approval date of the final plan, unless approved otherwise by the Board of Supervisors.

4. In the case where development is projected over a number of years, each section except for the last section, shall contain a minimum of 25 percent of the total number of lots, dwelling units or buildings as depicted in the final plan, unless a lesser percentage is approved by the Board of Supervisors.

5. A copy of the approved plan shall be available at the construction site at all times.

(*Ord. 1999-2*, 1/11/1999, §309)

§22-310. As-Built Plan.

1. After final plan approval and upon completion of all required improvements, the applicant shall submit an as-built plan prepared, signed and sealed by a registered professional engineer or surveyor. [*Ord. 2004-4*]

2. The as-built plan shall be provided on a reproducible media and drawn to the same scale as the approved final plan and shall be reviewed and approved by the Township Engineer. In addition, one electronic/digital copy of the as-built plan shall be provided in a format and on a media by which the Township can utilize the digital file for the purpose of future roadwork, utility improvements, exhibits, etc. [*Ord. 2004-4*]

A. Said plan shall indicate the actual location, dimensions and/or elevations of all completed improvements, including but not limited to:

(1) Monuments and markers.

(2) The location of the cartway and curb, for both sides of each street.

(3) Sanitary sewer main, manholes, rim and invert elevations and laterals.

(4) Storm sewers, inlets, rim and invert elevations and culverts.

(5) Water mains, service lines, valves, and fire hydrants.

(6) Street lights.

(7) Landscaping and screen planting.

(8) Berms.

(9) Permanent sedimentation, erosion control and stormwater management structures with as-built storage volume and outlet structure elevations and as-built elevations for all detention/retention basins or other storage structures.

(10) All easements and rights-of-way.

(11) All buried utilities, gas, electric, cable, water, sewer, etc.

B. The as-built plan shall be submitted in complete and accurate form prior to the final release of security funds being withheld, as provided in §22-516.

C. Completion of as-built drawings in accordance with this Chapter shall not relieve the applicant from its responsibility as may be required by the applicable municipal authority.

(*Ord. 1999-2*, 1/11/1999, §310; as amended by *Ord. 2004-4*, 6/14/2004, §XIII)

Part 4

Design Standards

§22-401. Application of Standards.

The following standards shall be applied by the Township Planning Commission, County Office of Planning and Development, and the Township Supervisors in evaluating plans submitted for review and/or approval. It is intended that these standards be considered the minimum requirements and may be modified as necessary to protect the health, safety, and general welfare of the public. All plans submitted for approval under this Chapter shall incorporate these standards.

(*Ord. 1999-2*, 1/11/1999, §401)

§22-402. General Standards.

The following requirements and guiding principles for subdivisions and land developments shall be observed with respect to the factors affecting the suitability of the site for such development:

A. The land development plan and guiding principles for subdivision and land developments shall be observed with respect to factors affecting the suitability of the site for such development.

B. A land development must be coordinated with existing land development in the neighborhood so the entire area may be developed harmoniously.

C. Land proposed for land development shall not be developed or changed by grading, excavating, or by the removal or destruction of the natural topsoil, trees, or other vegetative cover unless provisions for minimizing erosion and sedimentation are provided as required by the Pennsylvania Department of Environmental Protection and the Adams County Conservation District. The developer is responsible for obtaining approval and/or permits from one or both of these agencies as required.

D. In a development where the average slope exceeds 15 percent, the Township may require modifications to those regulations as may be recommended by the County Conservation District or the Township Engineer.

E. In all developments, every precaution shall be taken to preserve all natural and historic features determined to be worthy of preservation by the Township. Examples of such features would include, but not be limited to, wetlands, floodplains, large trees and stands of trees, watercourses, historic areas and structures, scenic view, etc. To ensure the protection of such features, the Township may require the following additional information to be submitted:

(1) A grading plan showing the existing and proposed ground elevations relative to the features.

(2) The accurate location of the features to be protected.

(3) An explanation of the precautions to be taken by the developer to protect such features.

F. Any plans for the alteration of a watercourse shall be incorporated into the

design plans and subject to approval by the Township, or where necessary, the U.S. Army Corps of Engineers, and/or Pennsylvania Department of Environmental Protection.

G. Land subject to hazards of life, health, or property as may arise from fire, floods, disease, excessive noise, odor, falling aircraft, or considered uninhabitable for other reasons may not be developed unless the hazards have been removed or the plans show adequate safeguards against them.

(*Ord. 1999-2*, 1/11/1999, §402)

§22-403. Street and Highway Standards.

1. *General Standards*. All streets proposed to be constructed within the Township shall conform to the following general design requirements:

A. Streets shall be logically related to topography so as to produce reasonable grades, satisfactory drainage and suitable building sites. Finished elevation of proposed streets shall not be more than 1 foot below the regulatory flood elevation. The Township may require profiles and elevations to ensure compliance. Also, drainage structure openings shall be sufficient to discharge flood flows without duly increasing flood elevations or creating a backwater situation onto adjacent properties.

B. Proposed streets, including functional classification shall be planned with regard to the existing street system, topographical conditions, public convenience in terms of fire protection and pedestrian traffic, probable volumes of traffic, existing and proposed use of land on abutting properties and future extensions of the street system.

C. When a subdivision abuts or contains an existing or proposed primary or secondary highway, the Township may require a marginal access street, reverse frontage, reduction of the number of intersections and/or separation of local from through traffic or other treatment which will provide protection for abutting properties.

D. No street shall terminate into a dead end. Any street dead ended for access to adjoining property or because of authorized staged construction shall be provided with a temporary paved turn-around and the use of such a turn-around shall be guaranteed to the public until such time as the street is continued.

E. New private streets are prohibited, unless the Board of Supervisors shall determine that the use of such private streets or rights-of-way is consistent with the intent of this Chapter. In approving private streets or rights-of-way, the Township may attach additional standards and/or conditions relating to design and/or construction. The use of private streets will not be allowed when its use is to circumvent the specifications required for public streets.

In general new private streets for residential subdivisions and land developments are prohibited. Private streets may be considered for commercial and industrial developments solely at the discretion of the Township.

In the event that a private street is to be allowed, in addition to complying with all Township design and construction standards for public streets, the developer will be required to submit for approval and record with the approved final plan, an

agreement outlining the responsibilities for perpetual maintenance of the private street which also shall release the Township of any liability regarding maintenance and acceptance of dedication. In addition, the Township shall reserve the right to require improvement bonding, surety, and inspection in accordance with the procedures of this Chapter.

F. The proposed street system shall extend existing or recorded streets at the same width or at widths required by the Chapter as determined by the Township, but in no case at less than the required minimum width.

G. The Township shall reserve the right to require alternate design standards relative to cartway, horizontal and vertical curves, and intersections where it is determined to be necessary to eliminate a potential safety hazard. Alternate design standards shall be as recommended by the Township Engineer in accordance with PennDOT and AASHTO Standards.

H. Access to developments shall be limited to single access, or in response to safety considerations multiple accesses may be provided as required by the Township. [*Ord. 2014-01*]

I. Where a proposed subdivision or land development is provided access by a single street, the Township may require a boulevard style entrance which would consist of two separate streets having a width of not less than 10 feet within a right-of-way of not less than 70 feet in width.

J. Applicants for a subdivision or land development abutting a State route shall be responsible for obtaining approval of any proposed improvements, and for obtaining a Pennsylvania Department of Transportation Highway Occupancy Permit.

K. *Prior to Final*. Plan approval, applicants shall certify that title to any street right-of-way are unencumbered by any liens or other obligations and that no prior right-of-way has been granted.

2. *Street Widths*.

A. Minimum street right-of-way and cartway widths shall be as follows:

Road Classification	**Required Right-of-way (feet)**	**Total Cartway Width (feet)**	**Designated Parking Lanes**
Arterial/Collector (ADT>1000)	Criteria to be as determined by Township with minimum 60-foot required right-of-way, 40-foot cartway width and no parking lanes		
Neighborhood Collector (1000>ADT>500)	60 feet	28 feet	None

Road Classification	Required Right-of-way (feet)	Total Cartway Width (feet)	Designated Parking Lanes
Minor Neighborhood Street (500>ADT>200)	50 feet 50 feet 50 feet	24 feet 30 feet 34 feet	None One Side Two Side
Minor Street (ADT<200)	50 feet 50 feet 50 feet	22 feet 28 feet 32 feet	None One Side Two Side
Alley	20 feet	12 feet	None
Note: 10 ADT = Approximately 1 Dwelling Unit Refer to Exhibits 22-10–22-14 for Typical Roadway Details			

[*Ord. 2004-4*]

B. Provision for additional street width or shoulder (right-of-way, cartway, or both) may be required when determined to be necessary by the Township to facilitate for aspects such as:

(1) Public safety and convenience.

(2) Traffic in commercial and industrial areas and in areas of high density.

(3) Widening of existing street where the width or alignment does not meet the requirements of the preceding paragraphs.

(4) Where topographic conditions require excessive cuts and fills.

(5) When curbs will not be required.

(6) To accommodate on-street parking.

In the case where conditions warrant alternate design standards, the design may be required to consider the parameters as a function of design speed. Alternate design standards may be referenced from either AASHTO or PennDOT.

C. In the case of a plan for a land development fronting on an existing public or private road of improper right-of-way and/or cartway width, the developer shall provide the following:

(1) Any required dedication of land for increasing the existing right-of-way to meet the requirements of this Chapter. The right-of-way must be centered from the centerline of the existing road.

(2) Improvements of roadway to meet cartway, curb, gutters or other standards of this Chapter. In lieu of making such improvements, the Township may at its discretion allow the developer to submit a fee to cover the cost of any improvements that are necessary to improve the existing roadway standards. The fee shall be based on an estimate prepared by the Township Engineer. [*Ord. 2004-4*]

3. *Street Grades*. The grades of streets shall not be less than the minimum or more than the maximum requirements listed below:

Types of Streets	Minimum Grade	Maximum Grade
Arterial streets	As determined by the Township after consultation with the Pennsylvania Department of Transportation.	
Collector streets	1.0 percent	7.0 percent
Minor streets and alleys	1.0 percent	10.0 percent
Intersections	1.0 percent	4.0 percent (for 100 feet from intersection)

[*Ord. 2004-4*]

A. In all differential grades exceeding 1 percent, vertical curves shall be used in changes of grade and shall be designated for proper sight distance.

B. On permission of the Township, minor street grade under special topographic conditions may exceed 10 percent for distances less than 100 feet provided the grade does not in any case exceed 15 percent.

C. Standards for minimum and maximum grade refer to both positive and negative grades.

D. All streets shall be designed so as to provide for the discharge of surface water from the right-of-way. The slope of the crown on a street shall not be less than ¼ of an inch per foot and not more than ⅜ of an inch per foot, as determined by the Township Engineer. Where a curve is banked to reduce lateral vehicular acceleration as required by the design speed of the road, the required crown is eliminated. Adequate facilities shall be provided at all low points along the street and other points necessary to intercept runoff.

4. *Horizontal Curves*.

A. Where connecting street lines deflect from each other at any point the line must be connected with a true circular curve. The minimum radius of the centerline for the curve must be as follows:

Type of Street	Minimum Radius
Arterial	500 feet
Collector street	300 feet
Minor street	200 feet

B. Straight portions of the street must be tangent to the beginning or end of the curve. Except for minor streets, there must be a tangent of at least 100 feet between reverse curves. For curves on arterial streets (or as otherwise determined by the Township Engineer), proper superelevation must be provided as required by the Township or the Pennsylvania Department of Transportation.

C. The Township may require that sight easements be provided in order to maintain adequate stopping sight distances.

D. The Township may require that the development be provided with speed limit signs in which speeds have been determined by the required engineering

studies to be recommended for the horizontal curve design.

5. *Vertical Curves*.

A. Vertical curves are required where the algebraic difference exceeds 1 percent or as determined by the Township Engineer.

B. Proper sight distance shall be provided with respect to vertical road alignments. The minimum sight distance measured along the centerline from 3.5 feet to height of an object 0.5 feet above grade shall be as follows:

Type of Street	Sight Distance
Arterial	As required by PennDOT design criteria for the posted speed
Collector	400 feet
Minor	250 feet
Alley	100 feet

[*Ord. 2004-4*]

6. *Cul-de-sac Streets*.

A. Cul-de-sac streets designed to be so permanently, shall not exceed 500 feet in length measured from the centerline of the intersecting street to the centerpoint of said cul-de-sac and shall not furnish access to more than 20 dwelling units. If a cul-de-sac street intersects another cul-de-sac street, the maximum total length of the sum of the streets shall not exceed 1,000 feet. The Board of Supervisors may grant a waiver of maximum length requirement with the recommendation of the Planning Commission.

B. A paved turn-around meeting the minimum dimensions and layout criteria as depicted on the Standard Township Cul-de-sac Street Exhibits shall be provided. Dimension and/or layout is subject to change where in the opinion of the Township a revised dimension and/or layout is necessary for reasons of safety, maintenance, accessibility, construction, etc. [*Ord. 2004-4*]

C. Temporary cul-de-sacs shall be designed to standards of permanent cul-de-sacs.

7. *Intersections*.

A. No intersection shall involve the junction of more than two streets.

B. Right-angle intersections shall be used wherever possible. In no instance, however, shall streets intersect at an angle of less than 75 degrees or more than 105 degrees. Intersections of two arterial streets shall be subject to Pennsylvania Department of Transportation standards.

C. Intersections shall be improved on all sides by leveling areas. Such leveling areas shall have the minimum length of 100 feet (measured from the intersection of the centerlines) within which no grade shall exceed a maximum of 4 percent. Where a through street exists or is proposed, the 4 percent leveling area may be waived pending review of the Township Engineer.

D. All streets intersecting a state road (US, PA, or SR) shall be subject to the

approval of the Pennsylvania Department of Transportation.

E. Design of the curb or edge of pavements must be taken into account. Such factors as types of turning vehicles, likely speeds of traffic, angle of turn, etc., but in no instance shall the radius of the curb or edge of pavement be less than the following:

Intersection	Curve Radius
Minor with minor street	25 feet
Minor with collector street	30 feet
Collector with collector street	35 feet
Any street with arterial street	35 feet or as determined after consultation with PennDOT

F. Distances between intersections shall be as follows:

Type of Intersection				
Arterial/Arterial	**Arterial/Collector/ Minor**	**Collector/ Collector**	**Collector/ Minor**	**Minor/Minor**
800 feet	800 feet	600 feet	500 feet	500 feet
Min. dist. between centerlines of intersections				
Min. separation of centerlines for streets not in alignment	Must be in alignment with planned or proposed streets entering from opposite side		200 feet	200 feet

G. Clear sight triangles shall be provided at all intersections. Measured along the centerline of the street there shall be a clear sight triangle with side lengths as follows:

Type of Street Side	Minimum Clear Site Triangle
Arterial	150 feet
Collector	100 feet
Minor	100 feet

No building or construction other than utility poles, street lights, street signs, or traffic signs, shall be permitted within such triangles. Whenever a portion of such line occurs behind the building setback line, such portion shall be shown on the plan and shall be considered a building setback line.

H. Where determined to be necessary due to speed considerations, clear sight triangle side may increase. Increased values shall be in accordance with PennDOT or AASHTO Standards.

I. Safe sight distances shall be provided at all intersections standards for design shall comply with AASHTO and the Pennsylvania Department of Transportation whichever shall be most applicable as determined by the Township Engineer.

8. *Slope of Bank Along Streets*. The slope of banks along streets measured perpendicular to the street shall be no steeper than the following:

A. One foot of vertical measurement for 3 feet of horizontal measurement for fills.

B. One foot of vertical measurement for 2 feet of horizontal measurement for cuts.

9. *Partial and Half-Streets*. The dedication of half-streets at the perimeter of new developments is prohibited, except to complete existing half-streets.

10. *Names of Streets*. Names of new streets shall not duplicate or approximate existing or platted street names, or approximate such names by the use of suffixes such as "lane," "court," or "avenue." In approving the names, consideration shall be given to existing or platted street names within the postal delivery district served by the local post office. New streets shall bear the same name or number of any continuation or alignment with an existing street. All street names shall be subject to Township approval.

11. *Reserve Strips*. Controlling access to streets by reserve strips is prohibited except where their control is definitely placed in the Township under control approved by the Township. A reserve strip is a parcel of ground in separate ownership separating a street from other adjacent properties or from another street.

12. *Alleys*.

A. Alleys are permitted in single-family, detached or semi-detached residential development to provide access to the rear of lots that have frontage on a public minor, collector, or arterial streets. [*Ord. 2004-4*]

B. While the use of dead end alleys is generally discouraged, where alleys do dead end, they shall be provided with a Township approved turn-around conforming to one of the Standard Township Cul-De-Sac Street Exhibits. [*Ord. 2004-4*]

C. Intersection involving alleys shall provided with a minimum radius of 10 feet.

(*Ord. 1999-2*, 1/11/1999, §403; as amended by *Ord. 2004-4*, 6/14/2004, §§XIV–XIX; and by *Ord. 2014-01*, 4/21/2014)

§22-404. Off-Street Parking.

1. *Standards*. Off-street vehicular parking facilities shall be provided in accordance with the Reading Township Zoning Ordinance [Chapter 27]. The following additional standards shall apply:

A. Multi-family, commercial and industrial parking facilities shall be

adequately illuminated if designed for use by more than eight cars after dusk.

B. Multi-family, commercial and industrial parking facilities shall be surfaced with a durable bituminous or concrete paving material.

C. All multi-family, commercial, public and industrial uses shall provide handicapped parking spaces as follows or where more stringent criteria exists by applicable regulatory agency or by the Americans with Disabilities Act:

Total Parking Spaces	No. Handicapped Spaces
1 to 25	1
26–50	2
51–75	3
76–100	4
101–150	5
151–200	6
201–300	7
301–400	8
401–500	9
501–1,000	2 percent of total
1,001 and over	20 plus 1 for each 100 over 1,000

[*Ord. 2004-4*]

D. For uses which are not addressed in the Zoning Ordinance [Chapter 27], the required parking spaces shall be based on a study as prepared by the developer and approved by the Township Engineer. The study shall address the following:

(1) The type of use and estimated number of trips generated during peak conditions (inbound and outbound).

(2) Estimated parking duration per vehicle (turnover rate).

(3) Based on estimated number of trips generated and average parking duration per trip, calculate the number of spaces required. In addition one space shall be provided for every two employees working during the maximum shift.

E. The minimum isle width for 90-degree parking shall be 25 feet. For angled parking, isle width shall be as approved by the Township Engineer.

(*Ord. 1999-2*, 1/11/1999, §404; as amended by *Ord. 2004-4*, 6/14/2004, §XX)

§22-405. Access Drives.

1. *Residential*. Access to any public street or highway shall be governed by the Reading Township Street Access Ordinance [Chapter 21, Part 2], as it may be amended from time to time, and all designs shall be in accordance with that ordinance: [*Ord. 2005-4*]

A. Within 10 feet of a street right-of-way line, an access drive may not exceed 20 feet in width nor be less than 12 feet in width.

B. The number of access drives on a street frontage, may not exceed one per lot unless circumstances prove that a second access is justified. Additional access points must be approved by the Township.

C. An access drive may not cross a street right-of-way line.

(1) Within 50 feet of the right-of-way line of an intersecting street when entrance is from an arterial street.

(2) Within 35 feet of the right-of-way line of an intersecting street when entrance is from a collector street.

(3) Within 25 feet of the right-of-way line of an intersecting street when entrance is from a minor street.

(4) Within 15 feet of a fire hydrant.

D. The drive may not exceed a slope of 7 percent within 25 feet of the street right-of-way lines.

Where a drive enters a bank through a cut, the shoulders of the cut may not exceed 50percent in slope within 25 feet of the point at which the drive intersects the street right-of-way.

E. All driveways shall have a minimum safe sight distance in accordance with the Pennsylvania Department of Transportation Rules and Regulations. Furthermore, all driveways which access Township roads shall be required to obtain a driveway permit from Reading Township. Plans shall indicate the following information:

(1) Minimum (limiting) site distances along each proposed lot, where applicable.

(2) The location of proposed driveways.

(3) Field run grades along the Township road in both directions from each lot.

(4) Speed limit of existing road in each direction.

(5) Location of trees and other visual obstructions which affect sight distances.

F. Width, turning radius, and slope requirements shall conform to Chapter 441 of the Pennsylvania Department of Transportation rules and regulations.

G. The minimum angle between the centerline of the driveway and the street shall not be less than 65 degrees.

H. A clear sight triangle of 75 feet measured along the street and driveway centerline shall be maintained. Permanent obstructions other than mail boxes and utility poles shall be prohibited.

I. All accesses shall be provided with a drainage culvert or gutter/swale. The minimum size of the pipe, unless otherwise approved, shall be 15 inches in diameter or equivalent open area arch/elliptical pipe and constructed of polyethylene (dual wall, smooth lined) or concrete. The stormwater management plan for a proposed development (where required by the Township) shall include calculations for sizing of access driveway culverts. Drainage structures within the

Pennsylvania Department of Transportation (PennDOT) right-of-way (where applicable) shall be subject to the review and approval of the PennDOT. [*Ord. 2004-4*]

J. To prevent drainage and erosion problems and to minimize future maintenance, access driveways shall be surfaced with a stabilized material within the public street right-of-way. Where access is to a paved roadway driveways shall be surfaced with bituminous or concrete material within the legal right-of-way.

K. In the event that an access drive will serve more than one residence, more stringent standards may be applied pending review and recommendation of the Township Engineer.

L. Driveways shall be constructed so that motorists are not required to back onto the roadway.

2. *Commercial and Industrial*. Access drives to any public street or highway in the case of a commercial or industrial development shall at a minimum conform to the standards for residential access drives, with the exception that all commercial or industrial drives shall be paved (at full width) with a bituminous material meeting the design criteria of a minor street (subsection .1). Additional standards shall be as follows:

A. All access ways to any public street or highway shall be located at least 200 feet from the intersection of any two street right-of-way lines, and shall be designed in a manner conducive to safe ingress and egress. Where practicable, exits shall be located on minor, rather than major streets or highways.

B. No design shall be approved which is likely to create a traffic hazard which has the potential to endanger public safety. Safety requirements which may be imposed in such a review shall include traffic control devices, acceleration or deceleration lanes; turning lanes, traffic and lane markings, and signs. The developer shall be responsible for the construction of any such traffic control devices which shall meet PennDOT approval.

C. All design standards of the Pennsylvania Department of Transportation as may be amended, are hereby incorporated into this Chapter.

(*Ord. 1999-2*, 1/11/1999, §405; as amended by *Ord. 2004-4*, 6/14/2004, §XXI; and by *Ord. 2005-4*, 6/13/2005, §1)

§22-406. Blocks.

1. *General*. The length; width, and shape of blocks shall be determined with due regard for:

A. The provision of adequate sites for buildings of the type proposed.

B. Topography.

C. Any other codes, plans and ordinances.

D. Requirements for safe and convenient vehicular and pedestrian circulation, including the reduction of intersections with major streets.

2. *Block Length*.

A. Blocks shall have a maximum length of 1,600 feet and a minimum length of 500 feet, provided that the Township Planning Commission or Township

Supervisors may increase the maximum and/or decrease the minimum length of blocks if the opinion of either body, topography of the land in question and/or surface water drainage condition warrant such a change.

B. In the design of blocks longer than 1,000 feet, special consideration shall be given to the requirements of satisfactory fire protection.

C. Where practical, blocks along major and collector streets shall not be less than 1,000 feet long.

3. *Pedestrian Crosswalks*.

A. Crosswalks shall be required wherever necessary to facilitate pedestrian circulation and to give access to community facilities.

B. Such crosswalks shall have a width of not less than 6 feet and a paved walk of not less than 4 feet. At a minimum all crossings shall be constructed to comply with the Americans With Disabilities Act of 1990 (or as most recently amended).

C. Crosswalks in mid blocks shall be provided with warning devices. The Township may also require that the developer provide the necessary engineering studies to justify the placement of crosswalks.

4. *Block Depth*. Residential blocks shall be of sufficient depth to accommodate two tiers of lots, except:

A. Where reverse frontage lots are required along a major street.

B. Where prevented by the size, topographical conditions or other inherent conditions of property, in which case the Township may approve a single tier of lots.

5. *Commercial and Industrial Blocks*. Blocks in commercial and industrial areas may vary from the elements of design detailed above if required by the nature of the use. In all cases however adequate provision shall be made for off-street parking and loading areas as well as for traffic circulation and parking for employees and customers.

(*Ord. 1999-2*, 1/11/1999, §406)

§22-407. Lots.

1. *General Standards*.

A. The size, shape and orientation of lots shall be appropriate for the type of development contemplated. Insofar as practical, side lot lines shall be at right angles to straight street lines or radial to curved street lines.

B. Where feasible, lot lines shall follow municipal boundaries rather than cross them, in order to avoid jurisdiction problems.

C. Generally, the depth of residential lots shall not be less than one nor more than two and one-half times their width.

D. Where the lots in a subdivision are large enough for resubdivision or where a portion of the tract is not developed, suitable access to these areas shall be provided.

E. Depth and width of parcels intended for nonresidential uses shall be adequate for the use proposed and sufficient to provide satisfactory space for on-site parking, loading and unloading, setbacks, landscaping, etc.

F. If after subdividing, there exists remnants of land they shall either be

incorporated into existing or proposed lots, or legally dedicated to public use, if acceptable to the Township.

G. No lots shall be created in any manner whatsoever which does not meet the minimum requirements of this or other Township ordinance.

H. Where dictated by topography, location, sewage disposal requirements, or other such conditions, the Township may require that the minimum lot size be increased. In such case, lot sizes within a subdivision may vary, provided Township approval is secured.

2. *Lot Frontage*.

A. All lots shall front upon a dedicated public street (existing or proposed), or upon a private street constructed to the Township's specifications and ordinances.

B. Double or reverse frontage lots are prohibited except where required to provide separation of residential development from major streets or to overcome specific disadvantages of topography, orientation, or location. [*Ord. 2004-4*]

C. All residential reverse frontage lots shall have a planting screen easement parallel to the accepted rear lot line and 20 feet in width across which there shall be no right of access.

3. *Lot Soils Evaluation Tests*.

A. Soil probe and percolation tests shall be performed for each lot of a proposed subdivision wherein buildings at the time of construction will not be connected to an existing public sewage disposal system. Each lot must be found satisfactory for on-site sewage disposal including an acceptable reserve or back-up area prior to the approval of the preliminary plan.

B. The soils tests called for above shall be performed in accordance with the regulations of the Pennsylvania Department of Environmental Protection. The Township Sewage Ordinance Enforcement Officer will perform the tests and certify the results.

C. A planning module for land development for any new subdivision or land development shall be prepared by the developer and approved by the Township and the Pennsylvania Department of Environmental Protection prior to the approval of the preliminary plan.

4. *Lot Sizes, Building Setbacks, and Standards*. Lot dimensions, sizes, and building setback requirements shall not be less than specified by the applicable Zoning Ordinance [Chapter 27] or as dictated by this Chapter as it relates to on-site sewage disposal or additional standards, whichever shall be more restrictive.

A. For condominium units the developer shall submit the following for review and approval by the Township:

(1) A declaration plan in accordance with Act 117 of 1963, the Unit Property Act. All condominiums shall be subject to the provisions of the Unit Property Act. The declaration and declaration plan must be recorded along with the final plan in the County Records Office.

(2) An agreement which outlines the responsibilities of the property owner or developer. The agreement shall address the items (as applicable) and be similar to the agreement as indicated in §22-516 of this Chapter.

B. For industrial developments no design shall be approved which does not conform to appropriate Federal, State, regional, and local standards relative to water and air pollution, particle emission, noise, electrical disturbances, waste disposal, light, glare, heat, vibration, radioactivity, and outdoor storage of materials:

(1) Fire and explosive hazards as governed by the Department of Labor and Industry and the laws of the Commonwealth of Pennsylvania.

(2) Liquid and solid wastes as governed by the Pennsylvania Department of Environmental Protection.

(3) Smoke as governed by the Pennsylvania Air Pollution Control Commission.

(4) Other forms of air pollution as governed by the United States Environmental Protection Agency.

(5) All applicable environmental permits must be obtained and copies submitted to the Township prior to preliminary plan approval.

C. Water and sewer facilities shall be public systems or approved private systems. No individual on-site systems shall be approved for attached row, townhouse, or condominium units.

D. For attached row, or townhouse units a permanent easement shall be provided where the rear property line abuts any property other than a street for the purpose of non-vehicular ingress and egress by center property owners. Minimum width of said easement shall be 5 feet. Vehicular access shall be included in such easement for maintenance purposes in which case access width shall accommodate a vehicle (minimum).

5. *Unique Lots*.

A. In the interest of traffic safety, the Township may require adjacent panhandle lots to share one access road and a formal written covenant to run with the land detailing rights and responsibilities of the individual lot owners must be established. The applicant shall adequately substantiate the need for such design.

B. The Township Engineer shall review proposed access to panhandle lots. Where required by the Township panhandle lot driveways shall be improved with a base course that shall consist of 8 inches of 2A stone. The base course shall be measured after it has been compacted with a roller of not less than 10 tons in weight.

C. Corner residential lots shall have enough extra width to permit appropriate front setback requirements from both streets.

D. Panhandle lots shall not be used as a means to create several adjoining lots where existing road frontage is limited.

[*Ord. 2014-01*]

(*Ord. 1999-2*, 1/11/1999, §407; as amended by *Ord. 2004-4*, 6/14/2004, §XXII; as amended by *Ord. 2014-01*, 4/21/2014)

§22-408. Easements.

1. Easements shall be provided for drainage facilities, overhead or underground

public and private utility facilities in consultation with the Township Engineer, the electric, telephone, sewer and water utilities, the Pennsylvania Department of Transportation, and the applicable municipal authority. No structures or trees shall be placed within such easements.

A. The minimum width of such easements shall be 20 feet for drainage facilities and underground utilities and 10 feet for overhead utilities. Larger widths may be required as recommended by the Township Engineer.

B. Wherever possible such easements shall be centered on the side or rear lot lines, or along the front lot lines.

2. Where a subdivision or land development is traversed by a watercourse, drainage way, channel or stream, there shall be provided a drainage easement, width to be as determined by the Township Engineer, conforming substantially to the line of such watercourse, drainageway, channel or stream and of such width as will be adequate to preserve the unimpeded flow of natural drainage or for the purpose of widening, deepening, relocating, improving or protecting such drainage facilities or for the purpose of installing a storm sewer. Under no circumstances shall the easement be less than 25 feet. Access easements shall also be required.

3. Electric, telephone and all other utility facilities shall be installed underground unless conditions require otherwise. The developer shall be required, prior to final plan approval, to obtain a letter from the appropriate utility company confirming that the developer has entered into an agreement to provide for an underground electric and telephone system in accordance with the Pennsylvania Public Utility Commission Investigation Docket #99, as amended, or has obtained a waiver from said Pennsylvania Public Utility Commission to allow overhead electric and telephone facilities.

4. Drainage easements shall be required between all lots within a subdivision. They shall be centered on property lines wherever possible Such easements shall preserve the unimpeded flow of natural drainage or provide for the construction of drainage facilities. In no case shall they be less than 20 feet in width.

5. *Petroleum, Gas and Electric Transmission Lines*.

A. Where any petroleum, petroleum products, natural gas or electric transmission line traverses a land development, the developer shall confer with the applicable transmission or distribution company to determine the minimum distance which shall be required between each structure and the centerline of such transmission line. Transmission lines rights-of-way shall not be permitted to be included within residential lots. Furthermore, all land grading and development activities proposed near such facilities shall be minimized to the greatest extent possible.

B. Additionally, the Township will require, with the preliminary plan application, a letter from the owner of the transmission line stating any conditions on the use of the tract and the right-of-way width, or a copy of the recorded agreement which shall contain the above data.

6. *Floodproofing of All Utilities*. All new or replacement public and/or private utilities and facilities in flood-prone areas shall be elevated or floodproofed up to the regulatory flood elevation.

7. No company intending to install any petroleum products or natural gas transmission line shall be allowed to construct the line on less than a 50-foot right-of-

way, such line to be installed in the center of the right-of-way for all existing transmission lines within the development.

8. Where necessary to access to public or common lands, a pedestrian easement shall be provided with a width of no less than 10 feet. Additional width may be required by the Township depending on the purpose and the use of the easement.

(*Ord. 1999-2*, 1/11/1999, §408)

§22-409. Land Grading Requirements.

1. *General*. No land or parcel of land within the Township shall be graded or filled by any landowner, developer or subdivider unless and until there has been compliance under the provisions of this Chapter.

(In the case of a subdivision and land development, the grading plan shall be submitted, reviewed, and approved as part of the preliminary plan process). The land grading plan shall be subject to the review and approval of the Township Engineer in accordance with his or her recommendations and applicable local, State, and Federal guidelines.

2. *Applicability*. The provisions of this Section shall apply if the existing condition of any land is proposed to be changed by any one of the following:

A. Land is to be graded or filled to alter the existing contours more than an average of 2 feet in elevation over any area in excess of 5,000 square feet.

B. Land is to be filled to a depth of 5 feet or more over any area in excess of 1,000 square feet.

C. Land is to be graded or filled within an existing watercourse (whether an intermittent or flowing stream, or any normally dry swale which carries any amount of water during rainfall).

E. In any event the Township shall reserve the right to require that a land grading plan be prepared and submitted when it is determined by the Township Engineer that the nature of the land disturbance, based on soils, slopes, proximity to sensitive areas, or etc. justifies the need.

3. *Approval of Land Grading Plan*. The land grading plan and all information and procedures relative thereto, shall in all respects be in compliance with the provisions of this Section.

4. *Drawing Requirements for Land Grading Plan*. The following data shall be shown on the land grading plan.

A. The plan shall be prepared and certification made as to its accuracy by a registered surveyor or registered professional engineer.

B. Property boundary consistent with the requirements for a preliminary plan under this Chapter.

C. Existing topographic contours of the area to be graded or filled at contour intervals of no more than 1 foot and depicted by a broken line unless the Planning Commission determines that a different contour interval is required. The proposed finished-grade contours shall be shown at contour intervals of 1 foot and depicted by solid line.

D. All existing watercourses within 500 feet of the area to be graded or filled,

whether on land owned by the applicant or by others, shall be shown on the plan.

E. Total acreage of tract.

F. Location and identification of all existing and proposed public and private easements.

G. Location of all existing and proposed structure, roads, utilities, parking areas, and development appurtenance.

H. Existing and proposed street names.

I. All proposed temporary and permanent erosion and sediment control and stormwater management facilities.

J. Construction staging narrative.

K. Detail drawings and specifications for all temporary and permanent erosion and sediment control and stormwater management facilities.

L. All supporting calculations, documentation, and manufacturer's literature.

5. *Additional Drawing Requirement for Land Grading Plan*. In addition to the drawing requirements previously stated, the following data shall be shown on the land grading plan.

A. The plan shall be drawn to scale of not less than 1 inch equals 50 feet (1 inch = 50 feet), shall indicate the magnetic north point, and owner's name and address.

B. Abutting property lines and the names of abutting landowners.

C. In cases of heavily wooded areas, the outline of the wooded areas and the location of trees which are to remain, shall be shown.

D. A location map at a scale not smaller than one inch equals 2,000 feet (1 inch = 2,000 feet) shall be drawn showing:

(1) Relation of tract to adjoining property.

(2) Related road and highway system within 1,000 feet of tract.

E. Statement that the applicant is the owner, equitable or authorized by the owner in writing to make application for the proposed land grading.

6. *Construction Requirements*.

A. *Fill*. Fill shall not contain boulders or fractured rock or broken concrete over 1 foot in largest dimension, or any organic material, trash, garbage, or broken asphalt paving. Fills of more than 5 feet deep shall be compacted while being placed by a method approved by the Township Engineer.

B. *Slopes*. All constructed slopes shall not exceed the following:

(1) Cut slopes in earth–2 horizontal, 1 vertical feet.

(2) Cut slopes in rocks–1 horizontal, 1 vertical feet.

(3) Fill slopes–3 horizontal, 1 vertical feet.

Slope limitations and allowances are subject to change pending review of the Township Engineer. The Township reserves the right to make limitations more stringent where public safety or protection of waterways, streets, and slopes are involved.

C. *Drainage*. All drainage construction shall meet the requirements of Part

6 of this Chapter.

7. *Other Requirements*.

A. During grading operations, necessary measures for dust control must be exercised.

B. Grading equipment shall not be allowed to cross streams. Provisions shall be made for the installation of temporary or permanent culverts or bridges.

C. No work will be allowed to commence until all applicable permits and approvals have been obtained. Where deemed necessary by the Township or State/Federal Law, the Adams County Conservation District must approve the grading plan.

D. In a subdivision where the slopes on the site average more than15 percent change in elevation, the Planning Commission may recommend larger lot sizes than otherwise provided in this Chapter.

E. Steep slope areas shall be preserved in their natural state whenever possible. Where construction of roads, buildings, driveways, or infrastructure cannot be avoided, disturbance shall be kept to the minimum area necessary and, in no case, shall it exceed the following permitted disturbance limits:

(1) *Moderately Steep Slopes (slopes of 15 percent to 25 percent)*. No more than 40 percent of moderately steep slopes shall be regraded, cleared, or otherwise altered or disturbed.

(2) *Very Steep Slopes (slopes greater than 25 percent)*. No more than 15 percent of very steep slopes shall be regraded, cleared, or otherwise altered or disturbed. In addition, the disturbance permitted on very steep slopes shall be limited to the following activities:

(a) Timber harvesting, when conducted in compliance with a Conservation District approved timber harvesting plan. Clearcutting or grubbing of trees is prohibited on very steep slopes.

(b) Grading for the minimum portion of a road or driveway necessary for access to the principal use and sewer, water, and other utility lines when it can be demonstrated that no other routing is feasible.

[*Ord. 2004-4*]

F. A pre-construction walk through is required prior to clearing and grubbing operations to physically delineate the limits of disturbance for areas near trees, tree groves, slopes, streams, floodplains, wetlands, etc. [*Ord. 2004-4*]

(*Ord. 1999-2*, 1/11/1999, §409; as amended by *Ord. 2004-4*, 6/14/2004, §XXIII)

§22-410. Sewage Disposal Systems.

Design of all sewage disposal systems shall be subject to review and approval of the Township as follows:

A. In the case of on-site sewage disposal systems, testing, design, permitting, and installation shall be in accordance with applicable Township ordinances and rules and regulations of the Pennsylvania Department of Environmental Protection. Review and approval shall be by the Township Sewage Enforcement Officer.

B. In the case of central sanitary sewer systems and wastewater treatment facilities which are to be privately owned, the design plans and specifications shall be subject to review of the Township and/or appropriate municipal authority, as part of the subdivision or land development plan process. Design criteria shall be that of PADEP and as supplemented by the Township and/or Authority. Review and approval of the sanitary sewer system plans by the Township is required for preliminary plan approval. Review and approval of the wastewater treatment facility plans by the Township is required for final plan approval. Following approval of the Township, the developer is required to obtain approval from the Pennsylvania Department of Environmental Protection. Final plan approval will not be granted until the developer submits copies of all applicable permits.

C. In the case of sanitary sewer systems and wastewater treatment facilities which are to be dedicated to the public, review and approval of design plans and specifications shall be by the applicable municipal agency or authority in accordance with their rules and regulations. Review and approval of plans and specifications by the Township and/or applicable municipal authority shall be part of the subdivision or land development plan process. Review and approval of the sanitary sewer system by the Township is required for preliminary plan approval. Review and approval of the wastewater treatment facility by the Township is required for final plan approval. Final plan approval will not be granted until the developer submits copies of all applicable permits from PADEP or other government agencies.

(*Ord. 1999-2*, 1/11/1999, §410)

§22-411. Water Supply Systems.

Reading Township is underlain primarily by two geologic bedrock units–the Gettysburg Formation and Diabase, which have both an unusually low groundwater recharge rate and low storage capacity. Additionally, Reading Township is within the Lower Susquehanna subbasin of the Susquehanna River Basin. Water withdrawals within the Susquehanna River Basin are regulated by the Susquehanna River Basin Commission (SRBC) and may also require permitting from the Department of Environmental Protection (DEP). Design of all water supply systems shall be subject to review and approval of the Township as follows:

A. Projects under the jurisdiction of the SRBC and/or DEP will be reviewed by the Township as part of the preliminary plan process. Copies of all submissions to the SRBC and/or DEP, and all correspondence received from those agencies, shall be sent to the Township final plan approval will not be granted until all permits are obtained.

B. In the case of central private or public water systems, which will be privately owned, review and approval of plans and specifications shall be by the Township and where deemed necessary, the applicable Municipal Authority, DEP and the Township or Authority Rules and Regulations. Review and approval shall be part of the preliminary plan process. Following approval by the Township, the developer is required to obtain approval from DEP, in accordance with their regulations, and possibly SRBC (i.e., if the proposed withdrawal rate is 100,000 gallons per day (gpd) or greater). Preliminary plan approval will not be granted until the Township and/or Authority has approved the plans. Final plan approval

will not be granted until all required permits are obtained.

C. In the case of public water systems, which will be dedicated to the public; review and approval of design plans and specifications shall be by the applicable municipal agency, or authority in accordance with their rules and regulations. Review and approval of plans and specifications shall be part of the preliminary plan process. Preliminary plan approval will not be granted until the applicant submits copies of all applicable approvals from the local municipal agency or authority. Final plan approval will not be given until all permits are obtained from DEP and other applicable government agencies (i.e., SRBC), as necessary.

D. In any residential development where 10 or more homes are proposed on lots of less than 2 acres each with on-site sewage disposal, a central water system shall be provided in accordance with the requirements of this Chapter.

E. Where water supply is to be provided by means other than by private wells owned and maintained by the individual lot owners within the proposed subdivision or development, applicants shall present evidence to the Board of Supervisors or the Planning Commission, as the case may be, that the subdivision or development is to be supplied by a certified public utility, a bonafide cooperative association of lot owners, or by a municipal corporation, authority, or utility. A copy of a certificate of public conveyance from the Pennsylvania Public Utility Commission or an application for such certificate, a cooperative agreement, or a commitment or agreement to serve the area in question, whichever is appropriate, shall be acceptable evidence.

F. A water resources impact study shall be required when the proposed development is not under the jurisdiction of the DEP or SRBC or will not be served by public water supplied by a municipal authority approved by the Township; and one or more of the following conditions are met:

(1) Individual, private on-site wells and distribution systems, in which lots will rely on groundwater as the primary source of drinking water, are proposed for use in residential subdivisions containing three lots or more and the smallest created lot is less than 5 acres in area.

(2) The nonresidential subdivision contains three lots or more.

(3) A proposed well is intended for nonresidential use (i.e., industrial, commercial, geothermal heating or cooling, institutional, agricultural).

G. A professional geologist licensed in the Commonwealth of Pennsylvania and qualified to conduct groundwater investigations shall prepare the Water Resources Impact Study. The purpose of the study will be to determine if there is an adequate supply of water for the proposed use and to estimate the impact of the additional water withdrawals on existing nearby wells, underlying aquifers and/or nearby surface water features (i.e., streams, wetlands, etc.). The Township Engineer shall review the impact study work plan, including proposed test well locations and pumping test procedures. Approval of the work plan by the Township Engineer shall be required prior to implementation.

H. The adequacy of water supply shall be determined based upon the guidelines established in the Adams County Wellhead Protection Plan (ACWHPP) of 300 gpd per household for peak demand calculations, and used as a conservative estimate by which to perform a groundwater budget analysis.

A water system, which does not provide the minimum rate of supply of water for the proposed use, does not meet drinking water quality standards, and/or adversely affects nearby wells, ponds, and streams, shall not be approved by the Township.

(*Ord. 1999-2*, 1/11/1999, §411; as amended by *Ord. 2004-4*, 6/14/2004, §XXIV)

§22-412. Water Resources Impact Studies.

1. The water resources impact study shall contain at a minimum the following information:

A. Calculations of project water demands, including a determination of required fire flows.

B. Literature review and reference of published geologic and hydrogeologic reports.

C. A geologic map of the area within a 1.0 mile radius of the proposed property boundaries and site.

D. The location of all faults, lineaments and fracture traces on-site and within ½ mile of the proposed property boundaries.

E. The locations of all existing and proposed wells within mile of the site and all large withdrawal wells (100,000 gpd+) within 0.5 mile of the site.

F. The locations of all test wells (both pumped and observation), along with the proposed lot boundaries, should be located on an accurate site plot plan or basemap at a minimum scale of 1 inch to 500 feet.

G. Define/map the boundary of the surface watershed in which the proposed development is located (use relevant USGS 7.5-minute topographic map as a base map). The approximate property boundary for the development shall be delineated on this surface watershed map.

H. Define known sources of groundwater contamination within this mapped surface watershed boundary and evaluate the potential impact(s), if any of this contamination on the proposed ground water use.

I. The location of all existing and proposed on-lot septic systems within ¼ mile of the site.

J. The location of all streams, perennial and intermittent, within ¼ mile of the site.

K. Define existing municipal, community, industrial and/or agricultural demands on groundwater resources located within 0.5 mile of the proposed development boundaries.

L. A water-table or potentiometric surface map showing groundwater elevation contours and the direction of groundwater flow.

M. Calculate a water budget for the subject site from available information contained in published literature and government sources for the geologic formation(s) occupying the site. The budget calculations should document long-term average precipitation (inches per year, in/yr), total surface runoff (in/yr), evapotranspiration (in/yr), and groundwater recharge rates (in/yr and gallons per day per acre). The long-term average groundwater recharge rate should be reduced

by 40 percent to estimate the annual amount of groundwater recharge expected during years of drought conditions.

N. Confirm that there are no nearby groundwater users whose withdrawal would inhibit the development from meeting its proposed groundwater usage rate.

O. Divide the total annual groundwater recharge calculated for drought conditions for the proposed development by 300 gpd (1 equivalent dwelling unit, EDU) to calculate the maximum number of residential building lots that can be adequately supplied by the groundwater resource underlying the subject development site.

2. *Site Specific Report Requirements*. The following site-specific investigations shall be carried out in preparation of the water resources impact study:

A. The installation and testing of new water supply wells for residential developments shall be included as part of the impact study as follows:

(1) One test well and at least one observation well shall be installed and tested for proposed developments of three lots or more and the smallest proposed lot is less than 5 acres in area.

(2) For proposed developments of six or more lots, test wells shall be installed and tested on 30 percent of the proposed lots. Test wells shall be located to be representative of both the variety of land forms and geologic formations contained by the proposed development.

(3) For developments underlain entirely by diabase, one test well shall be installed and tested on each lot to ensure an adequate water supply.

B. The installation and testing of new water supply wells for nonresidential developments shall follow the frequency given below:

(1) For a nonresidential user proposing to withdraw 25,000 gpd or less, one new test well shall be installed and tested. At least one observation well is required to be monitored during both the pumping/recovery phase of the well test.

(2) For a nonresidential user proposing to withdraw more than 25,000 gpd but less than 100,000 gpd, two new test wells shall be installed and tested.

(3) A nonresidential user proposing to withdraw 100,000 gpd or more falls under SRBC jurisdiction and will be reviewed by the Township. The Township shall not grant final plan approval until all necessary permits are obtained from all applicable regulatory agencies.

C. Any well installed in the Township for residential use, nonresidential use or testing purposes requires a permit from the Township and shall be constructed and sampled in accordance with the Township's Well Ordinance [Chapter 26, Part 2]. During the drilling and construction of the well, proper techniques of well development shall be utilized so as to obtain the best practical yield and quality, which is representative of the aquifer.

D. Each test well shall have an accurate geologic log prepared under the direction of a professional geologist licensed by the Commonwealth by a geologist during the drilling of the well, giving a detailed description of the type and thickness of soils and bedrock formations encountered. Additionally, the log should contain information on the depth and thickness of all water bearing zones

encountered and the yield from each zone.

E. *Pumping Tests and Recovery Tests*. Each new test well shall be pumped at a constant discharge rate for a minimum period of 8 continuous hours. The discharge rate shall be appropriate to the blown yield of the well to adequately stress the aquifer but not dewater the well. Recovery levels shall be measured at regular intervals immediately following the pumping period until 90% recovery of the pre-test water level is achieved.

F. During the performance of each pumping recovery test, time-drawdown measurements (within accuracy of $^1/_{10}$ foot) shall be taken from the pumped well and at least one nearby observation well. The time-drawdown measurements must be taken in both the pumped well and the observation well at the following minimum frequencies:

(1) One reading every minute for the first 10 minutes of the test.

(2) One reading every 2 minutes for the 10 to 100 minute test interval.

(3) One reading every 10 minutes for the 100 to 300 minute test interval.

(4) One reading every 20 minutes from 300 minutes to the end of the pumping period.

(5) Repeat frequency for recovery phase of test.

G. All observation wells should be located within 200 feet horizontal distance from the pumping well, or be close enough to incur measurable drawdown during the pumping phase of the test. The observation well can be either (1) an existing domestic well, but only if the domestic well is not actively pumped for the entire duration of testing (pumping and recovery phases) and its constrnction details (total depth and cased depth) penetrate the same hydrogeologic unit as the new well, or (2) a new supply well on an adjacent lot if that adjacent well penetrates the same hydrogeologic unit as and its construction details (total depth and cased depth) are compatible with the new well being tested, or (3) a new well specifically installed as an observation well for test purposes and scheduled for permanent abandonment following relevant Township requirements after the testing has been completed.

H. The time-drawdown data collected from each pumping test should be used to define the local aquifer characteristics, including hydraulic conductivity, transmissivity, coefficient of storage, and the expected long-term yield of the well(s) being tested. Distance-drawdown relationships and impact on surrounding water users from the proposed groundwater withdrawal should be included in the assessment. A groundwater availability analysis should be included in the impact study to demonstrate that there are sufficient groundwater resources within the drainage basin to support both existing users and the proposed withdrawal. Raw time-drawdown data and field testing notes should be included in the report as an appendix.

I. Water samples for chemical analyses should be collected from the pumped wells within 1 hour of the scheduled end of the pumping phase of each test. Samples shall be analyzed at a DEP-certified laboratory for pH, total dissolved solids, iron, manganese, nitrate-nitrogen and coliform bacteria. A copy of the laboratory analytical report for each sample shall be included and summarized in

the report.

J. All water supply wells to be used for domestic purposes shall have a minimum yield of 1.0 gpm. In the case of low yielding wells, i.e., less than 5 gpm, the proposed water system shall be designed to be able to provide sufficient storage via oversize tanks and/or storage in the well bore to meet expected peak demand (i.e., 300 gpd).

3. *Water Resources Impact Study Determination*. When a water resources impact study is required, the Board of Supervisors will approve the use of on-lot water supply systems (wells) or nonresidential use wells when:

A. This report indicates that justification of the project necessitates consideration of this type of water supply.

B. The anticipated water supply yield is adequate for the type of development proposed.

C. The installation of such systems will not endanger or adversely decrease the groundwater supplies to adjacent properties.

On relatively large projects, and when deemed appropriate and necessary by the Township Engineer, the analysis of the potential hydrologic impact using a groundwater model (i.e., MODFLOW) may be required in addition to the above fieldwork to adequately characterize and predict the overall impact the proposed project will have on availability groundwater resources.

(*Ord. 1999-2*, 1/11/1999, §412; as amended by *Ord. 2004-4*, 6/14/2004, §XXV)

§22-413. Traffic Impact Studies.

A traffic impact study shall be provided for all residential developments containing 50 or more dwelling units, for all nonresidential developments that generate 100 or more new directional peak hour trips, or when it is the position of the Township that the proposed development will have a significant impact on the safety and/or traffic flow of the adjacent street network. The traffic impact study shall be prepared in accordance with the requirements of this Section. All applicants with developments that do not meet the above stated criteria shall submit the information required in paragraph .B(4).

A. *Applicant*. The applicant is responsible for assessing the traffic impacts associated with a proposed development that meets any condition set forth above. The applicant is responsible for ensuring that any submitted development plans meet the minimum Federal, State, and local standards for geometric design. The study shall be prepared under the supervision of a registered professional engineer in the State of Pennsylvania. The engineer shall have verifiable experience in traffic engineering and the conduct of traffic impact studies. The final traffic impact study report shall include the seal of the supervising engineer.

B. *Traffic Impact Study Contents*. A traffic impact study, prepared for a specific site development proposal, shall follow the basic format shown below. Additions or modifications should be made for specific site conditions, when appropriate. This basic format allows for a comprehensive understanding of the existing site, future conditions without the proposed use and the impacts associated with the proposed development plan. Following is a brief narrative for each section of a traffic impact study:

(1) *Introduction*. This Section identifies the land use and transportation setting for the site and the surrounding area.

(a) *Site and Study Area Boundaries*. A brief description of the size of the land parcel, general terrain features, legal right-of-way lines of the highway, and the location within the jurisdiction and the region should be included in this Section. In addition, the roadways that afford access to the site and are included in the study area should be identified. The exact limits of the study area should be based on engineering judgement and an understanding of existing traffic conditions at the site. In all instances, however, the study limits must be mutually agreed upon by the developer, the developer's engineer, the Township, and PennDOT (if access to a State highway is proposed).

(b) *Site Description*. This Section should contain a brief narrative that describes the proposed development in terms of its function, size, and near and long-term growth potential. A sketch that clearly shows the proposed development within the site boundaries including, its internal traffic circulation pattern and the location and orientation of all proposed access points should supplement this description.

(c) *Existing and Proposed Site Uses*. The existing and proposed uses of the site should be identified with reference to the applicable zoning classification or classifications of the site. In addition, identify the specific use upon which the study is premised, since a number of uses may be permitted under the existing ordinances.

(d) *Existing and Proposed Nearby Uses*. Include a complete description of the existing land uses in the vicinity of the site as well as their current zoning. The applicant should also state the proposed uses for adjacent land, if known. This latter item is especially important where large tracts of underdeveloped land are in the vicinity of the site and within the prescribed study area.

(e) *Existing and Proposed Roadways and Intersections*. Within the study area, describe existing roadways and intersections (lane configurations and type of control) as well as improvements contemplated by government agencies.

(2) *Analysis of Existing Conditions*. This Section describes the data collection efforts and the volume/capacity analysis to be completed for the roadways and intersections in the study area under existing conditions.

(a) *Daily and Peak Hour(s) Traffic Volumes*. Turning movement counts shall be conducted during average weekday (Tuesday, Wednesday or Thursday) morning and afternoon peak traffic periods. If the proposed development is retail in nature, Saturday counts may be required at the discretion of the Township. Turning movement and mainline volumes are to be presented for the peak hour conditions while only mainline volumes are required to reflect daily traffic volumes. Traffic data must be recent (collected within the last 2 years), either collected specifically for the current traffic impact study or by a verifiable source. Provide schematic diagrams depicting daily and peak hour(s) traffic volumes for roadways

within the study area.

(b) Volume/capacity and level of service analysis at critical locations using techniques described in the most current version of the Highway Capacity Manual and highway capacity software, include an assessment of the relative balance between roadway volumes and capacity. Perform the analysis for existing conditions for the appropriate peak hours. Based on the results of the volume/capacity analyses, levels of service (A through F) are to be computed and presented. This Section should also include a description of typical operating conditions at each level of service.

(3) *Analysis of Future Conditions Without Development*. This Section describes the anticipated traffic volumes without the proposed development or subdivision request. The future year(s) for which projections are made is normally 10 years from the time any part of the development is opened to traffic. This time period is identified as the design year.

(a) *Daily and Peak Hour(s) Traffic Volume*. Clearly indicate the method and assumptions used to forecast future traffic volumes so that the calculations may be replicated. Prepare schematic diagrams depicting future traffic volumes similar to those described in subparagraph (2)(a) in terms of location and times (daily and peak hours).

(b) *Volume/Capacity and Level of Service Analysis at Critical Locations*. Describe the ability of the existing roadway system to accommodate future traffic volumes anticipated without the proposed site development. If roadway improvements or modifications are committed for implementation, present the volume/capacity analysis for these conditions. Based on the results of the volume/capacity analyses, determine levels of service (A through F).

(4) *Trip Generation*. Identify the amount of traffic generated by the site for daily and the peak hour conditions. The trip generation rates used in this phase of the analysis shall be justified and documented to the satisfaction of the Township. The current edition of the Institute of Transportation Engineers Trip Generation Manual shall be used for trip generation estimates. Pass-by trips shall be documented and considered, when appropriate. Documentation of trip generation estimates in the study report shall include copies of the pertinent sections of the Trip Generation Manual and associated calculations. If trip generation software is used, copies of the printouts shall be included in the study report.

(5) *Trip Distribution*. Identify the direction of travel for site generated traffic for the appropriate time periods. As with all technical analysis steps, the basic method and assumptions used in this work must be clearly stated in order that the Township can replicate these results.

(6) *Traffic Assignment*. Describe the utilization of study area roadways by site generated traffic. The proposed traffic volumes should then be combined with anticipated traffic volumes from subparagraph (3) to describe mainline and turning movement volumes for future conditions with the site proposed developed.

(7) *Analysis of Future Conditions with Development*. This Section

describes the adequacy of the roadway system to accommodate design year traffic with development of the site.

(a) *Daily and Peak Hour(s) Traffic Volumes*. Provide mainline and turning movement volumes for the highway network in the study area as well as driveway and internal circulation roadways for the appropriate time periods. Prepare schematic diagrams depicting future design year traffic volumes with the proposed development similar to those described in subparagraphs (2)(a) and (3)(a).

(b) *Volume/Capacity and Level of Service Analysis at Critical Locations*. Perform a volume/capacity analysis for the appropriate peak hours for future conditions with the site developed as proposed, similar to subparagraphs (2)(b) and (3)(b). As a result of the volume/capacity analysis, compute and describe the level of service on the study area roadway system.

(8) *Highway Capacity Evaluation*. All highway capacity evaluations shall consider the overall intersection level of service and delay, and evaluate each approach and movement to identify any substandard levels that need to be improved.

(9) *Need for Auxillary Lanes*. Determine the need for additional lanes at critical intersections, such as left and/or right turn lanes, based on design year traffic volumes. Document the procedures used in the analyses to allow the reviewer to replicate the results.

(10) *Queue Length Evaluation*. Provide a queue length analyses of all critical intersections to determine the anticipated queue length of left, right, and through lanes. The analysis shall be based on design year traffic volumes.

(11) *Sight Distance*. Document the available sight distance at all proposed site access locations and compare the measurements with required distances. Use the methodology described in the Pennsylvania Code, Title 67, Chapter 441, "Access to and Occupancy of Highways, Driveways and Local Roads," to evaluate sight distance.

(12) *Recommended Improvements*. In the event that the analysis indicates unsatisfactory levels of service will occur on study area roadways, a description of proposed improvements to remedy deficiencies should be included in this Section. These proposals would not include committed projects by the state and local jurisdictions that were described in subparagraph (1) and reflected in the analysis contained in subparagraphs (2) and (3).

(a) The overall goal of this Section will be to detail necessary improvements to the study area roadway network which will provide for a level of service for the design year(s) with the development which is at least equivalent to the projected level of service for the design year(s) without the proposed development. Based upon a comparison of the traffic analysis for the future conditions with and without the proposed development, roadway, and traffic operational improvements that will support this goal are to be identified and analyzed. These improvements may include both on-site and off-site roadway and traffic operational changes as determined by the preceding analyses.

(b) In developing the proposed improvements, the study preparer is to consider the following:

1) All highway capacity evaluations shall consider not only the overall intersection level of service and delay, but also evaluate each approach and movement to identify any substandard levels that need to be improved.

2) Substandard levels of service are defined as:

a) Levels of Service A, B, C, or D without development drop to levels of service E or F with development.

b) Level of Service E without development drops to Level of Service F with development.

c) Level of Service F without development experiences an increase in delay with development.

3) For locations where the level of service of the design year without the proposed development is F, the improvements shall provide an estimated delay which will be no worse than the delay for the design year without the proposed development.

4) Where new intersections are being established to serve as access to the proposed development, these intersections must be designed to at least operate at Level of Service C or better for rural conditions and Level of Service D or better for urban conditions.

(*Ord. 1999-2*, 1/11/1999, §413; as amended by *Ord. 2004-4*, 6/14/2004, §XXVI)

§22-414. Landscaping Requirements.

All plans shall be accompanied by a landscaping plan. The landscaping plan shall be reviewed and approved as part of the preliminary plan phase. Subdivision plans which are exempt from submittal of a preliminary plan shall be exempt from submittal of a landscaping plan. Requirements of the landscaping plan are as follows:

A. Plan shall be prepared by an individual experienced in selection of plantings.

B. Detail drawings and specifications shall be provided on the plan where applicable.

C. There shall be a key or legend which corresponds to the plan identifying type of plant.

D. Each lot within a subdivision or land development shall be provided with planting areas. In the case where the lot is intended for single-family residential use specific plants do not have to be indicated, however the plan shall identify minimum areas for landscaping.

E. Design shall be in accordance with standard practice of landscape architecture.

F. Selection of plants and trees shall be based on the location of the site and local environmental influence such as slope, soil, wind, temperature, shade, rainfall, and etc.

G. The landscape plan shall be subject to review and approval by the

Township Engineer.

H. Responsibility for future maintenance shall be that of the property owner, however the developer is responsible for installation under the terms of the posted financial surety.

(*Ord. 1999-2*, 1/11/1999, §414)

§22-415. Recreation Areas/Facilities.

1. Recreation areas and/or facilities shall be provided for all proposed residential developments, regardless of size, housing type, etc. The number of recreational facilities that shall be installed by the developer is based on the following table which represents the minimum number of such facilities:

Dwelling Units	Total Number of Recreational Facilities
24 or less	1
25–49	3
50–99	5
100–199	7
200–299	9
300–400	11
over 400	13

2. Recreational facilities shall consist of 0.125 acres per proposed residential unit and include, but not be limited to: play areas, basketball and/or volleyball courts, tennis courts, softball and/or baseball fields, pavilions, and soccer and/or football fields. The mix of facilities shall be determined by the developer and approved by Township.

3. *Design Criteria*.

A. Recreational areas shall be undivided by any streets, except where necessary to provide for proper traffic circulation and then only upon the recommendation of the Township Engineer and Planning Commission.

B Recreational areas shall be centrally located and readily accessible to the areas that they serve.

C. Recreational areas shall be suitably landscaped either by retaining existing vegetation and wooded areas and/or by a landscaping plan for enhancing open space areas through plantings which are consistent and complement the adjacent area.

D. Recreational areas shall be free of all structures, except those related to outdoor recreational uses.

E. Recreational areas shall be provided with sufficient perimeter parking (at discretion of Township) and with safe and convenient access by adjoining street frontage or other right-of-way easements capable of accommodating pedestrian, bicycle, maintenance and vehicle traffic.

F. Recreational areas shall be suitable for active recreational uses to the

extent deemed necessary by the Township, without interfering with adjacent dwelling units, parking, driveways and roads. Land to be used for active recreation shall not be in floodplain, on slopes exceeding 6 percent, in wetlands, stormwater facilities, or comprised of surface water.

G. The cost associated with the development of recreational facilities/areas shall be bonded as in the case of other public improvements bonding.

H. Maintenance responsibilities for recreational facilities/areas that will not be dedicated to the Township shall be included on the plans.

I. The plans shall indicate the extent of recreational areas and outline the general layout of proposed recreational facilities.

(*Ord. 1999-2*, 1/11/1999, §415; as amended by *Ord. 2004-4*, 6/14/2004, §XXVII)

Part 5

Improvements and Construction Requirements

§22-501. Monuments and Markers.

Monuments and markers must be placed so that the scored or marked point coincides exactly with the point of intersection of the lines to be monumented. They must be set so that the top of the monument or marker is level with the finished-grade of the surrounding ground. Monuments must be marked on the top with a copper or brass plate or steel dowel set in concrete.

A. *Monuments*.

(1) Monuments shall be set:

(a) At the intersection of all right-of-way lines.

(b) At the intersection of lines forming angles in the boundaries of the development.

(c) At such intermediate points as may be required by the Township Engineer.

(2) Monuments shall be 6 inches square or 4 inches in diameter, 30 inches long and constructed of concrete, stone or by setting a 4-inch cast iron or steel pipe filled with concrete.

B. *Markers*.

(1) Markers shall be set:

(a) At all lot corners except those monumented.

(b) At angles in property lines of lots.

(c) At beginning and ending of curves along street property lines.

(2) Markers shall be ¾ of an inch square, or ¾ of an inch in diameter, 24 inches long. Markers shall be made of iron pipes or iron steel bars.

(*Ord. 1999-2*, 1/11/1999, §501)

§22-502. Streets.

All streets shall be graded at full right-of-way width and paved to the grades and dimensions drawn on the plans, profiles, and cross-sections approved by the Township. Before establishing finished subgrade and paving the street surface, the developer must install all required underground utilities. Specifications for the construction of streets shall be in accordance with the following:

A. *Street Construction*. All street construction materials and methods shall be in accordance with Pennsylvania Department of Transportation Specifications Publication 408, as amended. In addition, all streets shall be constructed in accordance with any additional standards required by the Township Engineer, when in the opinion of the Engineer conditions such as traffic volume, or expected weight of proposed traffic justify alternate specifications. [*Ord. 2004-4*]

(1) *Major and Minor streets (Excluding Arterial Streets)*. [*Ord. 2004-4*]

(a) *Subgrade*.

1) Remove topsoil, organic, or otherwise unstable material. Material and compaction used for fill shall be specified on the plan and shall be subject to approval of the Township Engineer. Any fill shall be constructed in accordance with PennDOT Publication 408.

2) Fine grade and roll subgade with Township approved rolling equipment.

3) Following compaction the surface tolerance shall be checked. Irregularities of more than 0.05 feet shall be corrected to the satisfaction of the Township Engineer.

4) Where conditions dictate, and as recommended by the Township Engineer, a geofabric shall be installed on top of finished subgrade. Geo-fabric materials and installation shall as recommended by the Township Engineer.

5) Subgrade that has been disturbed by trenching shall be backfilled and compacted in 8-inch layers and inspected by the Township Engineer or his designated agent.

6) Subgrade shall be inspected by the Township Engineer or his designated agent prior to placement of the sub-base course. This may include appropriate compaction testing where deemed to be necessary by the Engineer.

(b) *Sub-Base Course*.

1) Sub-base course shall consist of a minimum of 6 inches of PA 2A coarse aggregate. Depth shall measured in place after compaction. Coarse aggregate shall be in accordance with PennDOT Publication 408 as most recently amended and shall be supplied from a certified PennDOT supplier.

2) Sub-base course shall be tested by digging one test hole for each 3,000 square yards or as directed by the Township Engineer.

(c) *Base Course*.

1) Base course shall consist of a minimum of 5 inches of bituminous concrete base course (BCBC). Depth shall be measured in place after compaction. BCBC shall be in accordance with PennDOT Publication 408 as most recently amended and shall be supplied by a PennDOT certified supplier.

2) Base course shall be tested by drilling three 6-inch test cores per 1,000 square yards of pavement or as directed by the Township Engineer. Pavement more than ¼-inch deficient shall be repaired to the satisfaction of the Township.

(d) *Pavement Surface Course*.

1) No final wearing course shall be placed on streets which are to be dedicated to the Township until 80 percent of proposed building construction is complete or as otherwise determined by the Township following consultation with the Engineer.

2) Pavement wearing course shall consist of 1½ inches of PA Type ID2 wearing. Thickness shall be measured in place after compaction. ID2 wearing course shall be in accordance with PennDOT Publication 408 as most recently amended and shall be supplied by a PennDOT certified supplier.

3) Surface course shall be sealed wherever it comes in contact with another structure (i.e., curb, manhole, inlet, etc.). This work shall be done in accordance with the specifications set forth in PennDOT Publication 408 as most recently amended.

4) Compaction shall be with Township approved rolling equipment.

5) *Quality Control*.

a) Remedy irregularities in the base course prior to placement of wearing surface. Base course surface must be cleaned and tack coated prior to placement of wearing surface.

b) As directed by the Township Engineer, drill three 6-inch test cores per 1,000 square yards of pavement. Pavement more than ¼-inch deficient shall be repaired to the satisfaction of the Township Engineer.

6) Alternate pavement types and depths will be considered pending review and approval of the Township Engineer. The minimum alternate standards shall be as follows:

a) Sub-base Course–8 inches PennDOT 2A coarse aggregate.

b) Binder Course–3 inches PennDOT DM binder.

c) Wearing Course–1½ inches PennDOT ID2 wearing.

(2) *Arterial Streets*. The depth and type of materials shall be as recommended by the Township following consultation with Pennsylvania Deparment of Transportation.

(3) The Township shall inspect roadway construction to determine compliance with standards of ordinance and conformance to approved plans. At a minimum each course shall be inspected prior to placement of each successive course.

(4) The Township shall reserve the right to require additional depth of materials or to deviate from type of material specified where, in the opinion of the Township Engineer, it is necessary to withstand projected traffic loads or adverse environmental conditions.

(5) The Township may, when deemed necessary by the Township Engineer, require the installation of subsurface drainage systems, which may consist of subgrade and/or drains. Construction standards shall be in accordance with PennDOT Publication 408 and roadway construction standards. This requirement may occur as a result of field inspections or compaction testing during construction.

[*Ord. 2004-4*]

B. *Street Lights*. In any proposed subdivision or land development involving 10 or more lots or dwelling units with an average lot size or area per dwelling unit of 15,000 square feet or less, a street light meeting Township requirements shall be installed at one corner of every intersection. In lieu of street lights, the Township may require the developer to install individual property lights in the ratio of one to each lot. In evaluation of these criteria, the total number of lots projected at build out must be considered.

Each light shall be controlled by an electric photocell to operate continuously from dusk to dawn. They shall be shielded or erected as to not illuminate the interior of adjacent structures.

C. *Street Signs*. Where deemed necessary by the Township, street name signs may be required. Such signs, if required, shall be placed at one corner of every intersection. The design of such signs shall be subject to Township approval.

D. *Street Trees*. The Township may require that shade trees be planted in the development to conform to the following specifications:

(1) Shade trees shall be planted by the developer at intervals of between 50 feet and 70 feet along both sides of all streets of the subdivision.

(2) The trees shall be located between the right-of-way and building setback line and a minimum of 5 feet from the right-of-way. No trees shall be planted between the sidewalk and curb.

(3) Each tree shall be at least 8 feet in height and a diameter of at least 1½ inches.

(4) The type of tree shall be noted on the plane and shall be subject to the review and approval of the Township.

(5) Individual lot owners shall be responsible for future maintenance of trees. Developer to be responsible until expiration of maintenance bond.

(6) Trees shall not be planted until finished grading has been completed.

(*Ord. 1999-2*, 1/11/1999, §502; as amended by *Ord. 2004-4*, 6/14/2004, §§XXVIII, XXXIV, XXXV)

§22-503. Curbs and Gutters.

1. Curbs shall be installed on both sides of any proposed street to be included in a proposed subdivision. Curbs may also be required on existing streets where curbs are necessary to control the flow of surface water and regulate traffic. Curbing requirements may be waived upon consideration of the recommendations of the Planning Commission, the Township Engineer, and/or the Pennsylvania Department of Transportation.

2. Curbs shall be provided in all parking compounds located within multi-family developments.

3. The construction of vertical curbs shall conform to Township specifications and the requirements of plain cement concrete curb, as specified in Publication 408 and RC standards of the Pennsylvania Department of Transportation, or as amended. Slant concrete curb may be used subject to approval by the Township following consultation with the Engineer and Roadmaster.

4. Curb construction shall be as follows:

A. *Materials*.

(1) *Cement Concrete*. All curbs shall be constructed of PennDOT Class A cement concrete. For slip forming, concrete shall be designed with a maximum slump of 1½ inches.

(2) Expansion joint filler shall include pre-molded fillers of cork, cork and rubber, or fiber types, meeting the requirements of PennDOT Publication 408. Molded expansion joint filler shall be ¼ of an inch in thickness.

B. *Construction Requirements*.

(1) *Preparation of Foundation*.

(a) The material upon which the curb is to be constructed shall be compacted to a firm, even surface.

(2) *Forms*.

(a) Forms shall be of metal, except that wood forms may be used on sharp curves and short tangent sections, when approved by the Engineer.

(b) Forms shall be free from warp, and of sufficient strength to resist the pressure of the concrete without springing.

(c) If wood forms are used, they shall be nominal 2-inch planks, finished on the inside and top.

(d) All forms and templates shall be thoroughly cleaned and treated to prevent concrete from adhering thereto and to prevent discoloration of the concrete.

(3) *Contraction Joints*.

(a) Contraction joints shall be spaced in uniform lengths of sections 20 feet maximum, except where shorter sections are required for curves or for closure, but in no case shall lengths be less than 4 feet.

(4) *Removal of Forms*.

(a) After removal of forms, minor honeycombed areas shall be filled with mortar (one part cement, two parts fine aggregate).

(b) Major honeycombed areas shall be considered as defective, removed and replaced.

4. Where a driveway enters a street, the curb shall be made lower for the width of the opening. When curbing is to be removed to construct a driveway, the length of the curbing to be removed shall be carried to the nearest expansion joint. If such a joint is more than 5 feet from the end of the curb removal, the section shall be neatly sawcut. In general, the depressed curb section used for driveways should conform to the depressed curb detail (Exhibit 22-3).

5. Curb cut ramps shall be provided at street intersections and at locations as required by the Americans with Disabilities Act of 1990, as most recently amended.

6. In the event that the requirements for curbing is waived the following may be required:

A. Drainage swales of dimensions approved by the Township Engineer shall be provided.

B. Shoulders may be required to separate the cartway and the drainage swale.

C. Additional right-of-way may be required to accommodate the shoulder and drainage swale.

D. The Township may require that a maintenance agreement be provided and made part of the approved plan whereby the developer agrees that the individual property owner or developer will be responsible for long-term maintenance of drainage swale.

(*Ord. 1999-2*, 1/11/1999, §503)

§22-504. Sidewalks.

1. In any proposed subdivision or land development with an average lot size or area per dwelling unit of 15,000 square feet or less, or where any subdivision is immediately adjacent to or within 1,000 feet of, any existing or recorded subdivision having sidewalks, sidewalks shall be installed on each side of the street in accordance with Township requirements.

2. All materials and construction requirements shall be governed by and subject to these specifications and to those referenced specifications of the Pennsylvania Department of Transportation's Specifications Form 408 as amended.

3. The Township may require the installation of sidewalks, at its sole discretion, where in the opinion of the Township pedestrian safety and/or mobility would be better served by the installation of sidewalks. In certain circumstances it may be desirable that an alternative method of pedestrian circulation be substituted for standard sidewalk construction. These alternative methods can include the installation of walking paths, greenways, bike paths, trails, or similar modes of non-vehicular circulation. In these instances the developer may submit a site plan depicting the location, layout, dimensions and any other criteria deemed necessary by the Township to evaluate the request for an alternative method. The Township shall review the submitted material and determine if the proposed alternative is acceptable. [*Ord. 2004-4*]

4. If proposed sidewalk is to replace existing sidewalk, the existing sidewalk shall be removed completely. All debris resulting from this process shall become the property of the contractor and shall be disposed of properly.

5. All ground upon which the sidewalk is to be placed shall be firm, level and free of all rocks, roots, tees, plants, and other material deemed to be deleterious.

6. The plans shall note that perpetual maintenance shall be the responsibility of the property owner.

7. Sidewalk construction shall be as follows:

A. *Materials*.

(1) *Cement Concrete*. All sidewalks shall be constructed of class A cement concrete per PennDOT Publication 408.

(2) *Aggregate*. Aggregate shall be PA No. 2B stone meeting the requirements of PennDOT Publication 408.

(3) *Expansion Joint Filler*. Expansion joint filler shall include premolded fillers of cork, cork and rubber, of fiber (resilient bituminous types), meeting

the requirements of PennDOT Publication 408. Premolded expansion joint filler shall be ¼ of an inch in thickness.

B. *Construction Requirements*.

(1) *Preparation of Foundation*.

(a) The foundation for the bed shall be formed at a depth of 10 inches below and parallel with the finished surface of the sidewalk.

(b) Unsuitable material shall be removed and replaced with approved material.

(c) The foundation shall be thoroughly compacted and finished to a firm, even surface.

(2) *Placing Of Aggregate for Bed*.

(a) The approved aggregate shall be spread on the prepared foundation to form a compacted bed 6 inches in depth.

(3) *Forms*.

(a) Forms shall be of wood or metal, straight, free from warp, and of sufficient strength when staked to resist the pressure of the concrete without springing.

(b) If wood, they shall be nominal 2-inch planks finished on the inside and the top; or if metal, they shall be of approved section.

(c) Forms shall have a depth equal to the depth of the concrete, and shall be thoroughly cleaned and treated with an approved material, to prevent the concrete from adhering thereto.

(4) *Joints*.

(a) Transverse dummy joints shall be spaced in uniform lengths of not more than 5 feet and shall be ⅛ inches wide and 1 inch deep and may be either hand formed or sawed joints.

(b) Premolded expansion joint material shall be cut to conform to the cross sectional area and be placed at structures and at uniform intervals of not more than 30 feet.

(5) *Placing Concrete*.

(a) Concrete shall be 4 inches in depth, 6 inches at driveways, and spaded sufficiently to eliminate all voids.

(b) An edger having a ¼-inch radius shall be used for edging.

(c) Sidewalks shall be sloped towards street at a uniform slope of ¼-inch per foot.

(d) Sidewalk shall include welded wire (mesh) fabric reinforcement in locations where subject to traffic (driveways).

(6) *Removal of Forms*.

(a) Side forms shall not be removed within 12 hours after the concrete has been placed.

(b) After removal of the forms, minor honeycombed areas shall be filled with mortar composed of one part cement and two parts fine

aggregate.

(c) Major honeycombed areas will be considered as defective work, and shall be removed and replaced.

(7) *Curing*.

(A) The sidewalk shall be cured and protected as specified in PennDOT Publication 408, with either membrane or water curing.

(8) *Backfilling*.

(a) After the concrete has cured for not less than 72 hours, the spaces adjacent to the sidewalk shall be backfilled with approved material in layers of not more than 4 inches in depth, which shall be thoroughly compacted to the required elevation and cross section.

(*Ord. 1999-2*, 1/11/1999, §504; as amended by *Ord. 2004-4*, 6/14/2004, §XXIX)

§22-505. Sewage Disposal and Water Supply Systems.

All sanitary sewer and water supply systems located in any designed floodplain district shall be flood proofed up to the regulatory flood elevation.

A. *Sewage Disposal Systems*. Design, review and approval of sewage disposal systems shall be as outlined in Part 4.

(1) The type of sewage disposal shall be consistent with the Township's Official Plan for Sewage Facilities (Act 537 Plan).

(2) All subdivisions and land developments shall be connected to a public sanitary sewer system if possible. Where a public sanitary sewer system is not accessible but is proposed for extension within 5 years to the development or as outlined otherwise in the Act 537, Official Sewage Facilities Plan, or to within 1,000 feet of the development, the developer shall install sewer lines, including lateral connections and watertight caps, to provide adequate service to each lot when connection to the public sanitary sewer system is made.

Design and construction standards shall be in accordance with the rules and regulations of the Township or applicable municipal authority and shall be subject to their review and approval in accordance with the provisions of this Chapter. Where applicable the sewer lines within the development shall be capped at the street right-of-way line. When capped sewers are provided, approved on-site disposal systems or a Township and State approved wastewater treatment facility must be provided in accordance with the provisions of this Chapter. If there is insufficient information available to provide a proper capped sewer system, the developer shall, at the Township's discretion, provide for the eventual installation of sanitary sewers by creating an escrow account in an amount sufficient to provide for the eventual construction of said sewer lines. The escrow amount shall be as determined by the Township Engineer.

(3) Where private community systems are to be used, they shall serve as an interim method of disposal until such time that a public system is available.

(4) Construction materials and methods of private community system shall be in accordance with the rules and regulations of the Township or applicable municipal authority, and the Pennsylvania Department of

Environmental Protection.

(5) All on-site sewage disposal systems shall be installed in accordance with the rules and regulations of Reading Township and the Pennsylvania Department of Environmental Protection.

(6) In the case of privately owned community systems, prior to approval of a preliminary plan, the developer shall provide an agreement to the Township, which provides for the following:

(a) Installation of the system in accordance with approved plans.

(b) Provision of financial surety to cover 110 percent of installation costs.

(c) Municipal inspection of construction.

(d) Completion and submittal of an as-built drawing.

(e) Assurance that upon availability of a public system that the development will be connected to the public system.

(f) Provision for guarantee for long-term operation and maintenance in accordance with the requirements of the Township per Chapter 71 of the Pennsylvania Department of Environmental Protection's Rules and Regulations.

(7) In the case of community systems that are to be dedicated to the public, construction shall be in accordance with the rules and regulations of the applicable agency or authority.

(8) Upon completion of any sanitary sewer system installation, the plan for the system (as-built) shall be filed with the Township.

B. *Water Supply and Distribution Systems*. Design, review, and approval of water supply and distribution systems shall be in accordance with Part 4.

(1) Where a water main supply is within 1,000 feet of, or where plans approved by the Township provide for the installation of such public water facilities, the developer shall provide the development with a complete water main supply system in accordance with the Township or applicable municipal authority requirements. At the Township's discretion, an escrow account may be required as set for in §22-505.A(2). This paragraph shall not apply when the water main supply or public water facilities is that particular water supply system installed in the Township pursuant to an agreement styled "Water Service Agreement" between the York Water Company, Reading Township and the Reading Township Municipal Authority, dated March 19, 2007. [*Ord. 2007-4*]

(2) All mains, laterals and other facilities for connection from lots to public water supply systems shall be installed by the landowner or developer in accordance with the standards and materials recommended by the water utility company. Proof from the water company of the approved location of the proposed water system shall be submitted to the Township and the Fire Marshall prior to plan approval. This paragraph shall not apply, when the public water supply system is that particular public water supply system installed in the Township pursuant to an agreement styled "Water Service Agreement" between the York Water Company, Reading Township and the

Reading Township Municipal Authority, dated March 19, 2007. [*Ord. 2007-4*]

(3) If connection to a public water supply system is not possible, a study on the feasibility of constructing a separate water supply system may be required by the Township and a report shall be submitted setting forth the findings. This paragraph shall not apply, when the public water supply system is that particular water supply system installed in the Township pursuant to an agreement styled "Water Service Agreement" between the York Water Company, Reading Township and the Reading Township Municipal Authority, dated March 19, 2007. [*Ord. 2007-4*]

(4) The installation of a private or public water supply system intended to serve more than a single-family dwelling which is to be privately-owned shall be by the developer, in accordance with standards of the PADEP, Reading Township or the applicable municipal authority. Upon completion of any water supply system the plan for the system as-built shall be filed with the Township and Township Authority.

C. *Association for the Operation and Maintenance of Private Systems*.

(1) When private sewage treatment systems and/or water supply systems are installed by the developer, an association or other organization must be established by the developer to operate and maintain the systems.

(2) Any and all legal documents involved in establishing this association or any other organization must be submitted and approved by Reading Township prior to approval of the final plan.

(3) Financial surety shall be provided to the Township in the amount to be determined by the Township Engineer in accordance with Chapter 71 of the Pennsylvania Department of Environmental Protection's Rules and Regulations; to ensure operation and maintenance of privately owned wastewater treatment facilities. This must be provided prior to final plan approval.

(*Ord. 1999-2*, 1/11/1999, §505; as amended by *Ord. 2007-4*, 8/20/2007, §§1, 2, 3)

§22-506. Fire Protection.

Fire hydrants or other means of fire protection as approved by the Township shall be provided as an integral part of any public or private community water supply system or as a part of any water system to serve an industrial use. The water system shall be of adequate supply and shall be designed to provide pressure adequate for the use of fire hydrants or other approved fire protection systems. Water supply shall be adequate for fire flow demands. The following represents minimum fire flow requirements:

District Classification	Minimum Fire Flow	Minimum Duration (Hours)	Maximum Hydrant Spacing
Residential Includes: 1- and 2-family dwellings	500 GPM 1893 L/min	1	660 feet 202 m

District Classification	Minimum Fire Flow	Minimum Duration (Hours)	Maximum Hydrant Spacing
Commercial Includes: all commercial uses, hotels, apartments, multiple residence buildings, schools and colleges	1,000 GPM 3785 L/min	2	330 feet 101 m
Industrial	1,500 GPM 5678 L/min	4	330 feet 101 m

The developer shall be required to prepare and submit all necessary engineering studies to ensure that adequate water pressure and volume will be available. A minimum residual pressure of 20 psi shall be maintained at all times.

(*Ord. 1999-2*, 1/11/1999, §506; as amended by *Ord. 2004-4*, 6/14/2004, §§XXX, XXXVI)

§22-507. Storm Drainage Systems and Stormwater Management.

Construction of storm drainage and stormwater management facilities shall be in accordance with Chapter 23, Stormwater Management.

(*Ord. 1999-2*, 1/11/1999, §507; as amended by *Ord. 2014-01*, 4/21/2014)

§22-508. Erosion and Sedimentation Control.

1. All development applications that involve grading or excavation shall conform to the requirements of the Adams County Conservation District or the Pennsylvania Department of Environmental Protection pertaining to erosion and sedimentation control. It shall be the responsibility of the applicant to secure approval of the Adams County Conservation District or the Department of Environmental Protection as is appropriate. Approval of plans by the Township shall not be construed as approval under such regulations.

2. In addition, the construction of erosion and sediment control facilities and land grading shall conform to the standards of this Chapter.

(*Ord. 1999-2*, 1/11/1999, §508)

§22-509. Floodplains.

1. The floodplain corridor shall be defined and established as the area of inundation which functions as a storage or holding area for flood water to a width required for a 100-year flood, as delineated in one of the following reports:

A. FEMA Flood Insurance Rate Maps.

B. A hydrologic report prepared by an individual registered in the Commonwealth of Pennsylvania to perform such duties.

C. A hydrologic report prepared by an agency of the U.S. Government.

2. In case of any dispute concerning the boundaries of a floodplain corridor, the Township shall determine the ultimate location.

3. Whenever a floodplain corridor is located within or along a proposed land

development, the plan shall include the location of the floodplain corridor with a plan note that:

A. The floodway shall be kept free of structures, fill, and other encroachments.

4. In the event construction is to take place in the floodway fringe area, the following shall apply:

A. Any structures located within the floodway fringe shall be flood-proofed to the limits of the floodplain corridor.

B. The lowest floor (including basement) in any residential building or structure shall be constructed at an elevation greater than the established regulatory flood elevation; and, in any nonresidential building or structure elevated the same or flood-proofed up to that height. Any structure, or part thereof, which will not be completely or adequately elevated, shall be flood-proofed in accordance with the provisions of this Part. Additional information may be obtained from the publication entitled "Flood-Proofing Regulations" (U.S. Army Corps of Engineers, June 1972).

C. Fill material shall extend laterally at least 15 feet from the building line from all points and shall not be steeper than 1 vertical foot to 2 horizontal feet.

5. No building is allowed in the floodplain without approval from Reading Township Board of Supervisors in accordance with the applicable Floodplain Ordinance [Chapter 8] or regulation.

6. All floodplain lands shall be excluded in the minimum lot area calculations. Additionally, the floodplain and/or floodway area shall be identified by elevation or by approximate distance from the centerline of the stream channel. Floodplain and floodway lines need not be identified by distances and bearings.

7. No subdivision and/or land developments, or part thereof, shall be approved if the proposed development and/or improvements will individually or collectively, increase the 100-year flood elevation more than 1 foot at any point.

8. If the Township determines that only a part of a proposed subdivision can be safely developed, the Township shall limit development to that part and shall require that development proceed consistent with this determination.

(*Ord. 1999-2*, 1/11/1999, §509)

§22-510. Underground Utility Lines.

Electric, telephone, and all other utility facilities shall be installed underground, and shall be flood proofed up to the regulatory flood elevation. The developer shall be required to obtain a letter from the appropriate utility company confirming that the developer has entered into an agreement to provide for an underground electric and telephone system in accordance with the Pennsylvania Public Utility Commission Investigation Docket #99, as amended, or has obtained a waiver from said Pennsylvania Public Utility Commission to allow overhead electric and telephone facilities.

(*Ord. 1999-2*, 1/11/1999, §510)

§22-511. Petroleum Lines.

When any petroleum or petroleum products transmission line traverses a land

development, the developer shall confer with the applicable transmission or distributing company to determine the minimum distance which shall be required between each dwelling unit and the centerline of such petroleum or petroleum products transmission line.

(*Ord. 1999-2*, 1/11/1999, §511)

§22-512. Natural Gas Lines.

The minimum distance from a natural gas line to a dwelling unit shall be as required by the applicable, transmission or distributing company, or as shall be required by the applicable regulations issued by the Department of Transportation under the Natural Gas Pipe Line Safety Act of 1968, as amended, which ever is greater.

(*Ord. 1999-2*, 1/11/1999, §512)

§22-513. Provision for Requirement of Lands for Recreation and Other Public Sites.

1. In the approval of subdivision and land development plans, the Township shall consider the need for appropriately sized recreational facilities and open space.

2. Recreational facilities shall be provided in accordance with §22-415 of this Chapter.

3. In phased developments, the recreational facilities/areas serving any individual phase shall be constructed prior to issuance of building permits for that phase.

Families to be Served	Minimum Playground and Neighborhood Park Acreage to be Recommended
0–50	1.0
50–100	3.0
100–200	5.0
200–400	7.0
For each additional 100 families	1.0

(*Ord. 1999-2*, 1/11/1999, §513; as amended by *Ord. 2004-4*, 6/14/2004, §XXXI)

§22-514. Water Areas.

In a development abutting a lake, river, or other significant water body, the Board of Supervisors, upon consultation with the Planning Commission, may request the dedication or reservation of:

A. Any title to the water body the developer may possess beyond the wharf or dock line for public use.

(*Ord. 1999-2*, 1/11/1999, §514)

§22-515. Reservations.

On sites for eventual public acquisition, no building development is permitted during the period of reservation. Said period of time shall not extend more than 12

months without the consent of the developer. Such reservations shall be noted on the final plan.

(*Ord. 1999-2*, 1/11/1999, §515)

§22-516. Completion of Improvements or Guarantee Thereof; Prerequisite to Final Plan Approval.

1. *Completion of Improvements*.

A. No subdivision and/or land development application shall be finally approved unless the streets shown on such plan have been improved to a mud-free or otherwise permanently passable condition, or improved as required by this Chapter and any walkways, curbs, gutters, street lights, fire hydrants, shade trees, water mains, sanitary sewers, storm sewers and other improvements as required by this Chapter have been installed in accordance with this Chapter. In lieu of the completion of any improvements required as a condition for final plan approval, including improvements or fees required, the developer shall deposit financial security with the Township in an amount sufficient to cover the costs of such improvements or common amenities including, but not limited to, roads, storm water detention and/or retention basins and other related drainage facilities, recreational facilities, open space improvements, or buffer or screen plantings which are or may be required.

B. When requested by the developer, in order to facilitate financing, the Board of Supervisors shall furnish the developer with a signed copy of a resolution indicating approval of the final plan contingent upon the developer obtaining a satisfactory financial security. The final plan (record plan) shall not be signed nor recorded until the financial improvements agreement is executed. The resolution or letter of contingent approval shall expire and be deemed to be revoked if the financial security agreement is not executed within 90 days unless a written extension is granted by the Board of Supervisors. Such extension shall not be unreasonably withheld and shall be placed in writing at the request of the landowner or developer.

2. *Completion Guarantee*.

A. To satisfy the completion of improvements required as a condition for the final approval of the subdivision and/or land development plan as set forth in this Chapter, the landowner or developer shall deposit financial security acceptable to the Board of Supervisors in an amount sufficient to cover the costs of such improvements, estimated, calculated and determined as set forth below.

B. Without limitation as to other types of financial security which the Township may approve, which approval shall not be unreasonably withheld, Federal or Commonwealth chartered lending institution irrevocable letters of credit and restrictive or escrow accounts in such lending institutions shall be deemed acceptable financial security.

C. Such financial security shall be posted with a bonding company or Federal or Commonwealth chartered lending institution chosen by the party posting the financial security, provided said bonding company or lending institution is authorized to conduct such business with the Commonwealth.

D. Such bond or other security shall provide for, and secure to the public, the

completion of any improvements, which may be required on or before the date fixed in the formal action of approval or accompanying agreement for completion of the improvements.

E. The amount of financial security to be posted the completion of the required improvements shall be equal to 110 percent of the cost of completion estimated as of 90 days following the date scheduled for completion by the landowner or developer. The Township may adjust the amount of the financial security annually, by comparing the actual cost of improvements which have been completed and the estimated cost for the completion of the remaining improvements as of the expiration of the 90th day after either the original date scheduled for completion or a rescheduled date of completion.

Subsequent to said adjustment, the Township may require the landowner or developer to post additional security in order to assure that the financial security equals said 110 percent. Any additional security shall be posted by the landowner or developer in accordance with this subsection.

F. The amount of financial security required shall be based upon an estimate of the cost of completion of the required improvements, submitted by a landowner or developer and prepared by a professional engineer licensed as such in this Commonwealth and certified by such engineer to be a fair and reasonable estimate of such cost. The Township, upon the recommendation of the Township Engineer, may refuse to accept such estimate for good cause shown. If the landowner or developer and the Township are unable to agree upon an estimate, then the estimate shall be recalculated and recertified by another engineer licensed as such in this Commonwealth and chosen mutually by the Township and the landowner or developer. The estimate certified by the third engineer shall be presumed fair and reasonable, and shall be the final estimate. In the event that a third engineer is so chosen, fees for the services of said engineer shall be paid equally by the Township and the landowner or developer.

G. If the party posting the financial security requires more than 1 year from the date of posting of the financial security to complete the required improvements, the amount of financial security may be increased by an additional 10 percent for each 1-year period beyond the first anniversary date from posting of financial security or to an amount not exceeding 110 percent of the cost of completing the required improvements as reestablished on or about the expiration of the preceding 1-year period by using the above procedure.

H. In the case where development is projected over a period of years, the Board of Supervisors may authorize submission of final plans by section or stages of development as it finds essential for the protection of any finally approved section of the development.

I. As the work of installing the required improvements proceeds, the party posting the financial security may request the Board of Supervisors to release or authorize the release, from time to time, such portions of the financial security necessary for payment to the contractor or contractors performing the work. Any such requests shall be in writing addressed to the Board of Supervisors who shall have 45 days from receipt of such request within which to allow the Township Engineer to certify, in writing, to the Board of Supervisors that such portion of the work upon the improvements has been completed in accordance with the approved

plan. Upon such certification, the Board of Supervisors shall authorize release by the bonding company or lending institution of an amount as estimated by the Township Engineer fairly representing the value of the improvements completed or, if the Board of Supervisors shall be deemed to have approved the release of funds as requested. The Board of Supervisors may, prior to final release at the time of completion and certification by its engineer, require retention of 10 percent of the estimated cost of the aforesaid improvements.

J. Where the Board of Supervisors accepts dedication of all or some of the required improvements following completion, the Board may require the posting of financial security in the form of a maintenance bond to secure structural integrity improvements of said as well as the functioning of said improvements in accordance with the design and specifications as depicted on the final plan for a term not to exceed 18 months from the date of acceptance of dedication.

Said financial security shall be of the same type as otherwise required in this Section with regard to installation of such improvements, and the amount of the financial security shall not exceed 15 percent of the actual cost of installation of said improvements.

K. If water mains or sanitary sewer lines, or both, along with apparatus or facilities related thereto, are to be installed under the jurisdiction and pursuant to the rules and regulations of a public utility or municipal authority separate and distinct from the Township, financial security to proper completion and maintenance thereof shall be posted in accordance with the regulations of the controlling public utility or municipal authority and shall not be included within the financial security as otherwise required by this Section.

L. If financial security has been provided in lieu of the completion or improvements required as a condition for the final plan approval, the Township shall not condition the issuance of building, grading or other permits relating to the erection or placement of improvements, including buildings, upon the lots or land as depicted upon the final plan upon actual completion of the improvements depicted upon the approved final plan. Moreover, if said financial security has been provided, occupancy permits for any building or buildings to be erected shall not be withheld following the improvement of the streets providing access to and from existing public roads to such building or buildings to a mud-free or otherwise permanently passable condition, as well as the completion of all other improvements as depicted upon the approved final plan, either upon the lot or lots or beyond the lot or lots in question if such improvements are necessary for the reasonable use of or occupancy of the building or buildings.

M. Failure to complete any construction or development of the proposed subdivision or land development within 5 years following the approval of a final plan by the Township shall automatically render the approval of the plat null and void, unless an extension of time has been requested in writing by the applicant and a written approval granted by the Reading Township Board of Supervisors. Further, failure of the applicant to comply with the requirements of §508(4) of the Pennsylvania Municipalities Planning Code, as amended, 53 P.S. §10508(4), the contents, of which are also hereby incorporated herein by reference, shall subject the subdivision or land development to any and all changes in zoning, subdivision and other governing ordinances enacted by the Township subsequent to the date

of the initial preliminary plan submission.

3. *Release from Improvement Bond*.

A. When the landowner or developer has completed all of the necessary and appropriate improvements, the landowner or developer shall notify the Board of Supervisors, in writing, by certified or registered mail, of the completion of the aforesaid improvements and shall send a copy thereof to the Township Engineer. The Board of Supervisors shall, within 10 days after receipt of such notice, direct and authorize the Township Engineer to inspect all of the aforesaid improvements. The Township Engineer shall, thereupon, file a report, in writing, with the Board of Supervisors, and shall promptly mail a copy of the same to the landowner or developer by certified or registered mail. The report shall be made and mailed within 30 days after receipt by the Township Engineer of the aforesaid authorization from the Board of Supervisors. Said report shall be detailed and shall indicate approval or rejection of said improvements, either in whole or in part, and if said improvements, any portion thereof, shall not be approved or shall be rejected by the Township Engineer, said report shall contain a statement of reasons for such non-approval or rejection.

B. The Board of Supervisors shall notify the landowner or developer, within 15 days of receipt of the Township Engineer's report, in writing by certified or registered mail of the action of the Board of Supervisors with relation thereto.

C. If the Board of Supervisors or the Township Engineer fails to comply with the time limitation provisions contained herein, all improvements will be deemed to have been approved and the landowner or developer shall be released from all liability, pursuant to its performance guaranty bond or other security agreement.

D. If any portion of the said improvements shall not be approved or shall be rejected by the Board of Supervisors, the landowner or developer shall proceed to complete the same and, upon completion, the same procedure of notification, as outlined herein, shall be followed.

E. Nothing herein, however, shall be construed in limitation of the landowner's or developer's right to contest or question by legal proceedings or otherwise, any determination of the Board of Supervisors or the Township Engineer.

F. Where herein reference is made to the municipal engineer, he shall be a duly registered professional engineer employed by the municipality or engaged as a consultant thereto.

G. The Township may prescribe that the applicant shall reimburse the Township for the reasonable and necessary expense incurred for the inspection of improvements. Such reimbursement shall be based upon a schedule established by ordinance or resolution. Such expense shall be reasonable and in accordance with the ordinary and customary fees charged by the municipal engineer or consultant for work performed for similar services in the community, but in no event shall the fees exceed the rate or cost charged by the engineer or consultant to the municipalities when fees are not reimbursed or otherwise imposed on applicants.

(1) In the event the applicant disputes the amount of any such expense in connection with the inspection of improvements, the applicant shall, within 10 working days of the date of billing, notify the Township that such expenses

are disputed as unreasonable or unnecessary, in which case the municipality shall not delay or disapprove a subdivision or land development application or any approval or permit related to development due to the applicant's request over disputed engineer expenses.

(2) If, within 20 days from the date of billing, the Township and the applicant cannot agree on the amount of expenses which are reasonable and necessary, then the applicant and Township shall jointly, by mutual agreement, appoint another professional licensed as such in the Commonwealth of Pennsylvania to review the said expenses and make a determination as to the amount thereof which is reasonable and necessary.

(3) The professional engineer so appointed shall hear such evidence and review such documentation, as the professional engineer in his or her sole opinion deems necessary and render a decision within 50 days of the billing date. The applicant shall be required to pay the entire amount determined in the decision immediately.

(4) In the event that the municipality and applicant cannot agree upon the professional engineer to be appointed within 20 days of the billing date, then, upon application of either party, the President Judge of the Court of Common Pleas of the judicial district in which the municipality is located (or if at the time there be no President Judge, then the senior active judge then sitting) shall appoint such engineer, who, in that case, shall be neither the municipal engineer nor any professional engineer who has been retained by, or performed services for, the municipality or the applicant within the preceding 5 years.

(5) The fee of the appointed professional engineer for determining the reasonable and necessary expenses shall be paid by the applicant if the amount of payment required in the decision is equal to or greater than the original bill. If the amount of payment required in the decision is less than the original bill by $1,000 or more, the Township shall pay the fee of the professional engineer, but otherwise the Township and the applicant shall each pay one-half of the fee of the appointed professional engineer.

(*Ord. 1999-2*, 1/11/1999, §516)

§22-517. Inspection of Improvements.

1. Construction of all improvements shall be subject to inspection for conformity with this Chapter and the approved plans.

A. Construction of all improvements covered by this Chapter are subject to inspection by the Township or its authorized representative.

B. Where inspection of improvements is required to determine compliance with approved plans, the cost and fees for said inspection shall be paid by the developer in accordance with the fee schedule as adopted by the Township.

C. No person shall interfere with or obstruct the ingress or egress to or from any such site or premises by an authorized representative or agent of the Township of Reading engaged in the inspection of work for compliance with the approved plans.

2. *As-Built Plan*.

A. Within 45 days after completion of improvements and approval of same by the Township, the landowner or, developer shall submit to the Board of Supervisors, a set of as-built plans and profiles in accordance with §22-310. In the event the as-built plan is not submitted in complete and accurate form, all funds being withheld by means of a completion guarantee shall not be released, until such plan has been satisfactorily completed.

B. The as-built plan shall be reproducible and drawn to the same scale as the final plan, and shall be certified to by an engineer or surveyor and approved by the Township Engineer.

C. Said plan shall indicate the actual location, dimensions and/or elevations of all completed improvements, including but not limited to those set forth in §22-310.

(*Ord. 1999-2*, 1/11/1999, §517)

§22-518. Remedies to Effect Completion of Improvements.

In the event that any improvements which may be required under this Chapter, or in accordance with the approved final plan, the Board of Supervisors may enforce the bond or other security by appropriate legal and equitable remedies. If the proceeds of such bond or other security are insufficient to pay the cost of installing, or making repairs or correction to all the improvements covered by such bond or security, the Board of Supervisors may, at its option, install or repair part of such improvements in all or part of the subdivision or land development and may institute appropriate legal or equitable action to recover from the land developer the monies necessary to complete the remainder of the improvements. All of the proceeds whether resulting from the security or from any legal or equitable action against the landowner or developer, or both, shall be used solely for the installation of improvements covered by such security.

(*Ord. 1999-2*, 1/11/1999, §518)

§22-519. Dedication and Acceptance of Improvements.

Upon completion of the construction of improvements in accordance with the approved subdivision and/or land development plan, the following conditions shall apply to any offer of dedication of the same and the acceptance thereof:

A. The Board of Supervisors shall have no obligation to take over and make public any street, or other improvement in or abutting a subdivision and/or land development. If the Board of Supervisors elect to accept an offer of dedication, such acceptance shall not occur unless and until:

(1) The required improvements, monuments and markers as shown on the approved subdivision and/or land development plan shall have been certified by the Township Engineer as having been constructed and installed in accordance with the provisions of this Chapter, and other ordinances, codes, regulations, plans and maps of the Township; and accurately delineated in an as-built plan.

(2) A maintenance guarantee is provided through the posting of financial security, such as that deemed to be acceptable to the Township as set forth in §22-516.1. Such guarantee shall assure the structural integrity of required

improvements as well as the functioning of said improvements, in accordance with the design and specifications as depicted on the approved final plans for a term not to exceed 18 months from the date of acceptance of dedication. Said financial security shall be in an amount equivalent to 15 percent of the actual cost of installation of the required improvements.

(3) A deed or deeds of dedication for all improvements, prepared and executed by the landowner or developer in accordance with be presented to the Board of Supervisors, together with a certificate from the contractor or contractors evidencing the payment of all labor and material costs, and a policy of title insurance insuring the fee title to the said improvements as free and clear of all liens and encumbrances and other objections to the title.

(4) Any offer of a deed of dedication must be accompanied by a maintenance bond and the as-built plan(s) and shall be submitted at least 90 days prior to the anticipated date for the acceptance of the deed of dedication.

B. The Board of Supervisors shall have no responsibility with respect to any improvements, not with standing any public use there of, unless and until such improvements are accepted for dedication by duly enacting or adopting an ordinance or resolution therefore.

C. *Existing Frontage Along Street of Improper Right-of-Way Width*.

(1) In the case of a plan for land development (including subdivision) fronting on an existing public street of improper right-of-way width, the developer shall be asked to provide dedication of land for widening the existing right-of-way to meet the minimum right-of-way standards as specified in §22-403.2 of this Chapter. Any dedication of right-of-way will be measured from the center line of the existing roadway. Where uncertainty exists as to the road classification, it shall be as specified in the Eastern Adams County Joint Comprehensive Plan. [*Ord. 2014-01*]

(2) In the event the developer is unwilling to make a dedication of right-of-way, when requested, one-half of the width of the minimum right-of-way standards specified in §22-403.2 shall be added to the minimum setbacks required along the existing public street. In these instances, setbacks shall then be measured from the centerline of the existing roadway.

(3) In all Residential (R-1, R-2, R-3) and Commercial Industrial (CI) Districts; and in the Agricultural Conservation (AC) and Land Conservation (LC) Districts involving more than four subdivided lots as defined by this Chapter; in the case of a plan for a land development fronting on an existing or proposed public street, the developer shall be required to improve the portion of the roadway on which the proposed development fronts to meet the minimum roadway standard as specified in this Chapter. This includes shoulders, embankments, gutters, berms, and/or curbing, for the entire road width for the entire length of road frontage along the developer's property, including the intersection of the road with any other road or highway. The Board of Supervisors, in lieu of requiring such improvements at the time of subdivision or land development, may require the payment of a uniform per building lot fee to be placed in a Highway Capital Improvement Fund, to be established by the Township by resolution. The developer shall also have the option to request waivers as set out in §22-702 of this Chapter of any

requirement under this Section.

(4) In the Agricultural Conservation (AC) and Land Conservation (LC) Districts, and involving four or fewer subdivided lots as defined by this Chapter, the Board of Supervisors may require the payment of a uniform per building lot fee to be placed in a Highway Capital Improvement Fund, to be established by the Township by resolution. The developer shall also have the option to request waivers as set out in Part 7 of this Chapter of any requirement under this Section.

[*Ord. 2008-3*]

(*Ord. 1999-2*, 1/11/1999, §519; as amended by *Ord. 2008-3*, 7/21/2008, §1; and by *Ord. 2014-01*, 4/21/2014)

§22-520. Maintenance Guarantee.

1. Where the Board of Supervisors accepts dedication of all or some of the required improvements following completion, the Board of Supervisors shall require the posting of financial security to secure structural integrity of said improvements as well as the functioning of said improvements in accordance with the design and specifications as depicted on the final plan for a term not to exceed 18 months from the date of acceptance of dedication. Said financial security shall be of the same type as otherwise required in this Section with regard to installation of such improvements, and the amount of the financial security shall not exceed 15 percent of the actual cost of installation of said improvements.

2. Defective improvements include any defect in material or workmanship that was latent in character and not discernible at the time of final inspection or acceptance by the Township and/or any damage to improvements by reason of the settling of ground, base or foundation thereof.

(*Ord. 1999-2*, 1/11/1999, §520)

Part 6

Fees

§22-601. Preliminary Plan.

At the time of filing, the preliminary plan shall be accompanied by a check, payable to the Township, in an amount equal to the fee required for consideration of preliminary plans set forth in the fee schedule currently in force in the Township. In addition, costs for engineering and legal fees incurred in the consideration of the plan, shall be paid by the applicant.

(*Ord. 1999-2*, 1/11/1999, §701)

§22-602. Final Plan.

At the time of filing, the final plan shall be accompanied by a check, payable to the Township, in the amount equal to the fee schedule currently in force in the Township. In addition, costs for engineering and legal fees incurred in the consideration of the plan, shall be paid by the applicant.

(*Ord. 1999-2*, 1/11/1999, §702)

§22-603. Fees for Review and Implementation of Plan.

1. The landowner or developer shall pay to the use of the Township, and upon invoice rendered by the Township, the actual cost of all reasonable and necessary fees incurred by the Township for the review and report thereon to the Township of all subdivision and/or land development plans by the Township Engineer, consultants, Township Solicitor and such other professionals as are engaged by the Township to review and evaluate subdivision and/or land development plans. The need for such professionals, and the selection thereof, shall be determined solely by the Board of Supervisors.

2. Review fees shall be based upon a schedule established by ordinance or resolution. Such review fees shall be reasonable and in accordance with the ordinary and customary charges by the Township Engineer or consultants for similar service in the community, but in no event shall the fees exceed the rate or cost charged by the Township Engineer or consultants to the Township when fees are not reimbursed or otherwise imposed on applicants.

3. The Township may require that the developer pay a deposit to cover the cost of engineering and legal review of the plan. If following approval of the plan and satisfaction of any agreements, any portion of such deposit which is unused shall be returned to the developer. If the amount of the deposit is insufficient to cover the cost of such engineering and legal review, the developer may be required to submit additional funds or to reimburse the Township the additional costs for review of the plan.

A. In the event the applicant disputes the amount of any such review fees, the applicant shall, within 10 working days of the billing date, notify the Township. That such fees are disputed, in which case the Township shall not delay or disapprove a subdivision or land development application due to the applicant's

request over disputed fees.

B. In the event that the Township and the applicant cannot agree on the amount of review fees which are reasonable and necessary, then the applicant and the Township shall follow the procedure for dispute resolution as outlined in the Municipalities Planning Code, 53 P.S. §10101 *et seq*., as most recently amended.

4. *Material Tests*. The landowner or developer shall pay to the use of the Township and upon invoice rendered by the Township, the cost of performing all material tests determined by the Board of Supervisors to be necessary or desirable in connection with the inspection or approval of all subdivision and/or land development plans or improvements.

5. *Inspection Fees*. The developer or applicant shall, as part of the land development agreement, submit to the Township an amount as estimated by the Township Engineer, a fee to be placed in an escrow account to cover the cost of inspection of construction to certify that subdivisions and land developments are constructed in accordance with the approved plans. This shall include any necessary inspection services to process reduction in improvement bonds or surety.

6. *Other Fees*. The landowner or developer shall pay the Township for all fees incurred by the Township in the preparation and review of the subdivision and land development agreements, improvement and maintenance bonds, escrow agreements and other instruments deemed necessary or desirable by the Board of Supervisors in connection with subdivisions or land developments.

(*Ord. 1999-2*, 1/11/1999, §703)

Part 7

Modifications

§22-701. Modifications.

The Board of Supervisors may grant a modification of the requirements of one or more of the provisions of this Chapter if the literal enforcement will exact undue hardship because of peculiar conditions pertaining to the land in question, provided that such modification will not be contrary to the public interest and that the purpose and intent of the ordinance is observed.

A. All requests for a modification shall be in writing and shall accompany and be a part of the application for development. The request shall state in full the grounds and facts of unreasonableness or hardship on which the request is based, the provision or provisions of the ordinance involved, and the minimum modification necessary.

B. The request for modification may be referred to the Planning Commission for advisory comments.

C. The Board of Supervisors and the Planning Commission shall keep a written record of all action on all requests for modifications.

D. No modification shall be granted solely upon proof that the applicant's land would increase in value or that the applicant could use the land more profitably upon grant of the modification.

(*Ord. 1999-2*, 1/11/1999, §801)

§22-702. Procedure.

1. Any request for a waiver or modification shall be in writing and shall accompany and be a part of the submission of the plan, preliminary and/or final to which it refers. The request shall state in full the ground and facts of unreasonableness or hardship on which the request is based, the provision(s) of this Chapter involved, and the exact waiver or modification there from which is requested.

2. All proposals for waiver or modification from the provisions of this Chapter shall be reviewed and a recommendation made by the Township Planning Commission, whether requested by the developer or deemed necessary by the Board of Supervisors.

3. A record of the action on all waiver or modification from the provisions of this Chapter shall appear in the official minutes of the Planning Commission and of the Board of Supervisors.

(*Ord. 1999-2*, 1/11/1999, §802)

Part 8

Administration, Enforcement, and Penalties

§22-801. Administration.

1. The Board of Supervisors shall have the duty and authority for the administration and general enforcement of the provisions of this Chapter, as specified or implied herein.

2. Officials of the Township having regulatory duties and authorities connected with, or pertinent to, the subdivision, use or development of land shall have the duties and authorities for the controlling enforcement of the provisions of this Chapter, as specified or implied herein or in other ordinances of the Township.

3. Permits required by the Township for the erection or alteration of buildings, the installation of sewers or sewage disposal systems, or for other appurtenant improvements to, or use of, the land shall not be issued by the Township official until it has been ascertained that the site for such building, alteration, improvement or use is located in a development approved and publicly recorded in accordance with the provisions of this Chapter

4. Such permits shall be issued only after it has been determined that the site for such building, alteration, improvement or use conforms to the site description as indicated by the approved and recorded final plan or other land description acceptable in accordance with the provisions of this Chapter, and that it is in compliance with all applicable provisions of this Chapter.

5. The Township building permit officer shall require that application for building permits contain all the information necessary to ascertain that, and shall not issue any building permit until it is determined that, the site and plan for the proposed building, alteration or other improvement is acceptable in accordance with the provisions of this Chapter.

6. The Township Sewage Enforcement Officer shall require that applications for sewage disposal system permits contain all the information necessary for him to ascertain that, and he shall not issue any sewage disposal system permit until he determines that the site for the proposed system is acceptable in accordance with the provisions of this Chapter.

7. A municipality may refuse to issue any permit or grant any approval necessary to further improve or develop any real property which has been developed or which has resulted from a subdivision or real property in violation of any ordinance adopted pursuant to this Part. This authority to deny such a permit or approval shall apply to any of the following applicants:

A. The owner of record at the time of such violation.

B. The vendee or lessee of the owner of record at the time of such violation without regard as to whether such vendee or lessee had actual or constructive knowledge of the violation.

C. The current owner of record who acquired the property subsequent to the time of violation without regard as to whether such current owner had actual or

constructive knowledge of the violation.

D. The vendee or lessee of the current owner of record who acquired the property subsequent to the time of violation without regard as to whether such vendee or lessee had actual or constructive knowledge of the violation.

As an additional condition for issuance of a permit or the granting of an approval to any such owner, current owner, vendee or lessee for the development of any such real property, the municipality may require compliance with the conditions that would have been applicable to the property at the time the applicant acquired an interest in such real property.

(*Ord. 1999-2*, 1/11/1999, §901)

§22-802. Enforcement and Penalties.

1. Any person, partnership, or corporation who or which being the owner or agent of any lot, tract or parcel of land shall lay out, construct, open or dedicate any street, sanitary sewer, storm sewer, water main or other improvements for public use, travel or other purposes or for the common use of occupants of buildings abutting thereon, or who sells, transfers or agrees to enter into an agreement to sell any land in a subdivision or land development whether by reference to or by other use of a plat of such subdivision or land development or erect any building thereon, unless and until a final plan has been prepared in full compliance with the provisions of this Chapter, shall be guilty of a misdemeanor, and upon conviction thereof, such person, or the members of such partnership, or the officers of such corporation, or agent of any of them, responsible for such violation pay a fine not exceeding $1,000 per lot or parcel or per dwelling within each lot or parcel, but in no event shall the fine be less than $100. All fines collected for such violations shall be paid over to Reading Township.

2. The description by metes and bounds in the instrument of transfer or other document used in the process of selling or transferring shall not exempt the seller or transfer or from such penalties or from the remedies herein provided.

3. The Board of Supervisors may initiate and maintain civil action to obtain a writ of injunction against the owner or agency who is in violation of any provision of this Chapter, or who attempts the improper sale or conveyances of land; and in proper cases to set aside and invalidate any conveyances or agreements to convey land made prior to final plan approval of any subdivision or land development.

4. Nothing herein shall prevent the Board of Supervisors from taking such other action necessary to prevent or remedy any violation.

A. Duly authorized representatives of Reading Township have the right to enter private property at reasonable times to investigate any condition associated with this Chapter.

B. Any person who violates any of the provisions of this Chapter shall, upon being found liable therefore in civil enforcement proceedings commenced by Reading Township, shall be subject to a fine not exceeding $1,000, plus all court costs, including reasonable attorney fees incurred by Reading Township.

C. Upon discovery of any violation of this Chapter, Reading Township may, at its option, forgo any prosecution hereunder, and may grant to the owner a period of 7 calendar days to comply with the provisions of this Chapter. Upon failure of the owner to effect such compliance, the Township may initiate prosecution as

hereinabove set forth.

4. In addition to other remedies, the municipality may institute and maintain appropriate actions by law or in equity to restrain, correct or abate violations, to prevent unlawful construction, to recover damages and to prevent illegal occupancy of a building, structure or premises. The description by metes and bounds in the instrument of transfer or other documents used in the process of selling or transferring shall not exempt the seller or transferor from such penalties or from the remedies herein provided.

(*Ord. 1999-2*, 1/11/1999, §902)

§22-803. Appeals.

Decisions made by the Township may be appealed, in accordance with the Pennsylvania Municipalities Planning Code, 53 P.S. §10101 *et seq*.

(*Ord. 1999-2*, 1/11/1999, §903)

Part 9

Mobile Homes and Mobile Home Parks

This Part contains provisions setting forth minimum standards for:

A. The design, construction, alteration, extension, and maintenance of mobile home parks and related utilities and facilities.

B. Regulations for the erection of single mobile homes.

C. Provisions are included authorizing the issuance of permits for construction, alteration and/or extension of mobile home parks, the licensing of those who operate mobile home parks, the inspection of mobile home parks by authorized Township Officials, and the fixing of penalties for any violation of any provision of this Part.

§22-901. Definitions.

Common open space–land within a mobile home park, not including streets, off-street parking areas, private yard space, and areas set aside for public facilities, which shall be designed and set aside for the use of all residents of the mobile home park. This area shall be identified by separate parcel(s).

Internal street–a street in a mobile home park privately owned, constructed and maintained, which functions only to provide direct access to individual mobile home lots.

License–written annual approval, in whatever form, as issued by the Township, authorizing a person to operate and maintain a mobile home park.

Mobile home–a transportable, single-family dwelling intended for permanent occupancy, office or place of assemble contained in one unit, or in two units designed to be joined into one integral unit capable of again being separated for repeated towing, which arrives at a site complete and ready for occupancy except for minor and incidental unpacking and assembly operations and constructed so that it may be used without a permanent foundation.

Mobile home lot–a parcel of land in a mobile home park, improved with the necessary utility connections and other appurtenances necessary for the erection thereon of a single mobile home, which is leased to the occupants of the mobile home erected on the lot.

Mobile home park–a parcel of land under single ownership which has been planned and improved for the placement of mobile homes for non-transient use, consisting of two or more mobile home lot.

Mobile home stand–the part of an individual mobile home space which has been reserved for the placement of a mobile home and appurtenant structures and connections.

Person–any individual, firm, trust partnership, public or private association or corporation, or other entity.

Planning Commission–the Planning Commission of Reading Township.

Recreational vehicle–a vehicle which is designed for human occupancy under

transient circumstances, such as camping, travel or other recreation, sometimes variously know as a "travel trailer" or a "camping trailer."

Service or recreational building–a structure housing operational office, recreational, park maintenance and other facilities built to conform to required local standards.

Sewer connection–the sewer connection consists of all pipes, fittings, and appurtenances from the drain outlet of the mobile home to the inlet of the corresponding sewer riser pipe.

Sewer riser pipe–the sewer riser pipe is that portion of the sewer lateral which extends vertically to the ground elevation and terminates at each mobile home space.

Travel trailer–denotes a trailer which does not have a flush toilet or bath and shower enclosed within. Travel trailer shall not be allowed to be placed in mobile home park as a means of residence.

Usable site area–the usable site area is that portion of a mobile home park which is free of water surfaces, flood plains, severe high water table areas, quarries and slopes over 20 percent, and including structures or obstructions unrelated to the mobile home park usage.

Water connection–the water connection consists of all pipes, fittings, appurtenances from the water riser pipe to the water inlet pipe of the distribution system within the mobile home.

Water riser pipe–the water riser pipe is that portion of the water service pipe which extends vertically to the ground elevation and terminates at the designated point on each mobile home lot.

Water service pipe–the water service piping consists of all pipes, fittings, valves and appurtenances from the water main of the park distributing system to the water outlet of the distributing system within the mobile home.

(*Ord. 1999-2*, 1/11/1999, §1001)

§22-902. Permits for Mobile Home(s) and Mobile Home Park Construction, Alteration, or Extension.

1. *Approval Required*.

A. It shall be unlawful for any person to construct, alter, extend or operate any mobile home park within the limits of Reading Township unless a valid permit and/or license issued by Reading Township is obtained.

B. Design and improvements standards shall be consistent with this Chapter. In the event that there is a conflict, the more stringent shall apply.

2. *Application for Mobile Home Permits/Mobile Home Park Licenses*.

A. *Application to Reading Township*. The applicant shall submit an application to Reading Township for a permit to place a mobile home or to operate a mobile home park in Reading Township.

B. *Mobile Home Permit*. The following procedures shall apply solely for the proposed placement of a mobile home on a single parcel (separately deeded) or within a mobile home park:

(1) Any person desiring to locate a mobile home shall submit an application for a mobile home Permit (see Attachment 22-9-1) to Reading

Township.

(2) The Township shall review the application for compliance with this Chapter and other applicable ordinances of the Township. The Township may request the assistance of the Township Zoning Officer, Engineer, Solicitor, and other municipal officials in order to determine approval, conditional approval or disapproval of the application. The Township shall, within 45 days from the receipt of an application, issue a permit or disapprove the application and transmit the decision in writing to the applicant. A notice of disapproval shall cite the reasons for disapproval.

(3) The mobile home permit is not assignable and terminates within 1 year from the date of issuance, unless the mobile home is installed as prescribed in this Chapter.

C. *Mobile Home Park License*. The following procedure shall apply to all new and expansions of existing mobile home parks:

(1) *Design Plan Approval*. Any person desiring to establish a new mobile home park or expand an existing mobile home park shall secure approval under this Chapter prior to applying for a mobile home park license. The Township shall reserve the right to require financial security to guarantee installation of improvements in accordance with §22-516 of this Chapter.

(2) *Application Requirements*. All requests for a mobile home park license shall include the following:

(a) An application for a mobile home park license (see Attachment 22-9-2).

(b) Identification of the Adams County Recorder of Deeds reference numbers for the approved land development plan.

(c) A filing fee as set by resolution of the Township.

(d) Copies of the following permits where applicable; erosion control permit, highway occupancy permit, water supply permit, wastewater permit(s), and any other local, State, or Federal permits.

(3) *Review Procedures*.

(a) The Township shall review the application for compliance with this Chapter and other applicable ordinances of the Township. The Township may solicit the assistance of the Township Zoning Officer, Engineer, Solicitor, and other municipal officials in order to determine approval, conditional approval or disapproval of the application.

(b) The Township shall, within 60 days from the receipt of an application, issue a permit or disapprove the application and transmit the decision in writing to the applicant. A notice of disapproval shall cite the reasons for disapproval.

A mobile home park permit shall not be assignable and shall terminate 2 years following its issuance unless an extension is approved by the Township. The permit shall authorize construction of the mobile home park.

(c) Prior to issuance of a mobile home park license, the Township shall inspect finished construction of all improvements to ensure compliance with the approved plans. The cost for review and inspection

shall be paid by the applicant in accordance with the requirements of Part 6 of this Chapter and shall be paid prior to issuance of a license. Following satisfactory inspection of improvements and payment of all license review and inspection fees, a mobile home park license will be issued. The license will be issued within 45 days following certification of improvements by the Township Engineer. The Township, following recommendations of the Township Engineer, shall reserve the right to require that an as-built plan be submitted in accordance with the requirements of §22-310 of this Chapter.

The mobile home park license shall be valid for a period of 1 year and shall be renewed on an annual basis.

D. *Renewal Licenses*.

(1) Application for renewal of a mobile home park license shall be made to the Township at least 60 days prior to the expiration date of the license. Renewal of a mobile home park license shall be issued by the Township upon certification by the owner that the park continues to meet the standards and requirements hereunder for the issuance of an original license.

(2) It shall be unlawful for any person to operate a mobile home park without a valid license, renewed annually by the Township in the name(s) of the landowner and manager.

(3) Prior to annual renewal of any mobile home park license there shall be an inspection by the Township. If it is determined there are deficiencies or that the mobile home park does not comply to the Township's ordinances, the Township shall reserve the right to require that improvements be made to bring the mobile home park into compliance and to establish reasonable time limits for those improvements.

(4) The Township shall reserve the right to deny renewal of license, if there is not compliance.

(5) Individual lots in a mobile home park shall not be sold separately. Any sale of lots in a mobile home park shall be for the park as a whole.

E. *Transfer of Ownership*. Any transfer of ownership, interest or control of the mobile home park, including the merger, sale of shares of capital stock, sale of capital, shares of stock or otherwise, shall invalidate the license. The licensee shall give notice in writing to the Township, within 24 hours or on the next business day after a change in land ownership. Such notice shall include the name and address of the person succeeding ownership.

F. *Suspension*. Whenever, upon inspection of any mobile home park, it is determined that conditions or practices exist which are in violation of any provision of this Chapter, or of any regulations adopted pursuant thereto, the Township Supervisors shall give written notice to the person whom the certificate of registration and license were issued advising him that unless such conditions or practices are corrected within a reasonable period of time specified in the notice, the license to operate in the Township shall be suspended. At the end of such period, such mobile home park shall be inspected, and if such conditions or practices have not been corrected, and the licensee has not requested a hearing, the Township Supervisors shall suspend the license and give notice, in writing, of such

suspension to the person to whom the certificate and/or license was issued. Any person, partnership or corporation who is in violation of any provisions of this Chapter shall be subject to the penalties stated in §22-702 of this Chapter.

(*Ord. 1999-2*, 1/11/1999, §1002)

§22-903. Compliance of Existing Mobile Home Parks.

1. Mobile home parks in existence at the date of adoption of this Chapter and being duly authorized to operate as same by the Township be continued so long as they otherwise remain in compliance with this and any other pertinent ordinances currently in force in the Township.

2. Existing mobile home parks shall be required to submit an existing plot plan, drawn to scale, when applying for a mobile home park license renewal. The plot plan shall contain information as required for a final land development plan as it relates to existing features.

3. Any subsequent new construction, alteration, or extension of as existing mobile home park shall comply with the provisions of this Chapter.

4. Any existing mobile home park which, in the judgement of the Board of Supervisors creates a fire or health hazard shall be required to comply with this Chapter within a reasonable period of time as determined by the Board of Supervisors.

(*Ord. 1999-2*, 1/11/1999, §1003)

§22-904. Inspection of Mobile Home Parks.

The Township Supervisors or other authorized Township representative may inspect a mobile home park periodically to determine compliance with this Chapter. As a result of such inspection, the Township Supervisors may give notice for any violations of this Chapter.

(*Ord. 1999-2*, 1/11/1999, §1004)

§22-905. Design and Improvement Standards.

The location, design, and improvement standards for all mobile home parks shall comply with the following minimum requirements. Site design and improvement standards shall conform to the standards of the Adams County or Reading Township Zoning Ordinance [Chapter 27] (whichever may be applicable), and this Chapter.

A. *Site Design*.

(1) *Site Area*. The site area of any mobile home parks shall not be less than 30 contiguous acres.

(2) *Density*. The overall density of any mobile home park shall not exceed four dwelling units per acre of the site area. Site area shall exclude all streets and public rights-of-way, recreation areas, flood plains, wetlands, areas of slopes greater than 15 percent, and common parking areas. Additionally:

(a) All lots shall abut and be accessible from a park street.

(b) Mobile home lots within the park shall have a minimum area of 7,500 square feet and a minimum width of 70 feet frontage (with a maximum of four units per acre, or as otherwise required).

(c) Each mobile home lot shall be improved to provide a mobile home stand and adequate frost free foundation for the placement of the mobile home unit.

(3) *Buffering*. A 50-foot wide buffer yard shall be provided along the entire perimeter of any mobile home park. Within such buffer yard a planting screen at least 15 feet wide shall be provided. Buffer yards shall be naturally landscaped and shall not be used for building, parking, loading or storage purposes. Except for access drives or pedestrian interior walkways permitted by the Township, a buffer yard shall be continuous for the entire length of a property line.

(4) *Site Location*. The location of all mobile home parks shall comply with the following minimum requirements. The parks must be:

(a) The site shall be free from adverse influence by swamps, marshes, garbage or rubbish disposal areas or other potential breeding places for insects or rodents.

(b) The area shall not be subject to flooding.

(c) The site shall not be subject to any hazard or nuisance, such as excessive noise, vibration, smoke, toxic matter, heat, odor, glare, etc.

B. *Site Drainage*.

(1) The ground surface in all parts of a park shall be graded and equipped to drain surface water in a safe, efficient manner. Where necessary, storm sewers, culverts, and related facilities shall be provided to insure the adequate drainage of all locations within the park.

(2) A stormwater management plan shall be prepared in accordance with the requirements of Chapter 23, Stormwater Management, and submitted for review and approval by the Township prior to the granting of a permit to construct any mobile home park. [*Ord. 2014-01*]

(3) All stormwater facilities shall be kept completely separate from any sanitary waste facilities.

(4) Surface water collectors and other bodies of standing water shall not be susceptible to the breeding of mosquitoes and other insects.

C. *Soil and Ground Cover Requirements*.

(1) Exposed ground surfaces in all parts of every park shall be paved, or covered with stone screenings, or other solid material, or protected with a vegetative growth that is capable of preventing soil erosion and the emanation of dust during dry weather.

(2) All paving and/or planting shall be designed in accordance with the storm drainage plan.

(3) Park grounds shall be maintained free of vegetative growth which is poisonous or which may harbor rodents, insects, or other pests.

(4) An erosion control plan shall be submitted to the Township for review. The erosion control plan shall be approved by the Adams County Conservation District.

(5) A landscaping plan shall be submitted for review and approval by the Township.

D. *Park Areas for Nonresidential Uses*.

(1) No part of any park shall be used for non-residential purposes, except such uses that are required for recreation, direct servicing, management, or maintenance of the park and its residents.

(2) Nothing contained in this Section shall be deemed as prohibiting the sale of a mobile home located on a mobile home lot and connected to utilities.

E. *Building Setback Requirements*. Mobile homes shall be located to conform with the building setback requirements of the Adams County or Reading Township Zoning Ordinance [Chapter 27] (whichever is applicable). In addition, the following shall apply:

(1) There shall be a minimum distance of 25 feet between an individual mobile home, including accessory structures attached thereto, and adjoining pavement of a park street, or common parking area or other common areas and structures.

(2) Mobile homes shall be located at least 50 feet from any park property line and at least 10 feet from any side or rear mobile home lot line.

(3) Mobile home parks located adjacent to any industrial or commercial land use shall be required to provide screen planting (trees, shrubs) along the property boundary line separating the park from such adjacent use.

F. *Blocks*. The size and shape of blocks in mobile home parks shall be determined with regard to:

(1) Need for convenient access, automotive and pedestrian movement.

(2) Providing desirable lot depths for pedestrian interior walkways and easements for utilities to be located within the block.

(3) Blocks shall not exceed a maximum length of 1,600 feet.

G. *Placement of Mobile Homes*.

(1) Mobile homes, including any additions or accessory structures attached thereto, shall be separated from each other and from other buildings by at least 20 feet on all sides.

(2) An enclosure of compatible design and material shall be erected around the entire base of each mobile home. Such enclosure shall provide sufficient ventilation to inhibit decay and deterioration of the structure.

(3) *Construction of Mobile Home Stands*.

(a) The area of the mobile home stand shall be improved to provide an adequate frost proof foundation for the placement of the mobile home, thereby securing the superstructure against uplift, sliding, or rotation, and in no event shall the mobile home be erected on jacks, loose blocks, or other temporary materials. The mobile home stand shall not heave, shift, or settle unevenly under the weight of the mobile home due to frost action, inadequate drainage, vibration or other forces acting on the superstructure.

(b) The mobile home stand shall be provided with anchors and tie-downs such as cast in place concrete "deadmen." These anchors and tie-downs shall be placed at least at each corner of the mobile home stand and

each shall be able to sustain a minimum tensile strength of 2,800 pounds. In the event that the mobile home is greater than 50 feet the Township shall reserve the right to increase the number of tie-downs required.

(c) Where required by the Township, the applicant shall submit a design including drawings of the mobile home stand for review and approval.

H. *Park Street System*.

(1) *General Requirements*.

(a) A minimum of two vehicular accesses shall be provided. All accesses shall abut a public street.

(b) The entrance road, connecting the park with a public street or road shall have a minimum pavement width of 32 feet.

(c) Other internal streets shall:

1) Streets shall have a minimum width of 28 feet.

2) Dead end or cul-de-sac streets shall be provided at the closed end with a paved turn-around having an outside diameter of at least 80 feet.

3) All street within mobile home park shall have concrete curbs and sidewalks in accordance with this Chapter.

(d) Design and construction of all streets within the mobile home park shall be in accordance with this Chapter. All mobile home park streets shall be private streets.

(e) All mobile home lots shall be connected to a common street by means of a sidewalk or walkway. Such individual sidewalks shall have a minimum width of 3 feet.

(f) *Street Names and Lot Numbers*. Each street within a mobile home park shall be provided with street names and street name signs in accordance with this Chapter. Lot numbers shall be displayed in an easily visible location on each mobile home in a common place on the front yard side of the mobile home at least 6 feet above the ground.

(2) *Parking Areas*.

(a) Two paved off-street parking spaces for motor vehicles shall be provided on each mobile home lot. Required parking spaces shall be so located as to provide convenient access to the mobile home, and shall not exceed a distance of 200 feet from the mobile home that it is intended to serve.

(b) A separate parking area for recreational vehicles shall be provided in each mobile home park.

(c) Paved off-street parking areas must also be provided to serve recreation areas, utility or service buildings, and the park office.

(d) Layout, design, and the number of spaces for all types of common parking areas shall be subject to review and approval by the Township in accordance with Township ordinances.

I. *Required Recreation Areas or Fees*.

(1) In all mobile home parks a recreation area or areas, with suitable facilities shall be maintained within the park for the use of all park residents.

(2) Land required for such recreation areas shall be not less than 10 percent of the gross site area. Such land should generally be provided in a centralized location or in decentralized locations in larger mobile home parks.

(3) Recreation areas shall be so located as to be free of traffic and environmental hazards and should, where the topography permits, be centrally located on relatively level ground.

(4) If suitable recreation area cannot be properly provided for the park, as determined by the Board of Supervisors, payment of a recreational purpose fee is required. Such fee shall be in conformance with §22-415 of this Chapter.

(5) A recreation plan shall be submitted for review and approval per §22-415 of this Chapter.

(*Ord. 1999-2*, 1/11/1999, §1005; as amended by *Ord. 2014-01*, 4/21/2014)

§22-906. Water Supply.

1. *General Requirements*.

A. If the mobile home park can be served by the extension of an existing public water supply system of satisfactory quantity, quality and pressure and is within 1,000 feet of the proposed development, the applicant shall connect to the municipal system. The distribution system within the proposed development shall be subject to review and approval in accordance with the provisions of this Chapter. Where a satisfactory public municipal water supply system is not available, a community water supply system shall be provided in accordance with requirement of this Chapter.

B. The water system design shall be approved by the Pennsylvania Department of Environmental Protection and Reading Township and/or the applicable municipal authority.

2. *Design and Construction Standards*. Water supply and distribution systems shall be designed and constructed in accordance with Township standards and the requirements of this Chapter. Where there is a conflict between this Section and other Sections of this Chapter or other rules and regulations of the Township and/or the applicable municipal authority, the more stringent shall apply. Standards shall also be as recommended by the Township Engineer.

3. *Source of Supply*.

A. The water supply shall be capable of supplying a minimum of 400 gallons per day per mobile home.

B. The well or suction line of the water supply system shall be located and constructed in such a manner that neither underground nor surface contamination will reach the water supply from any source and will not be constructed beneath any sewer line.

C. No well-casings, pumps, pumping machinery or suction pipes shall be placed in any pit, room or space extending below ground level nor in any room or space above ground which is walled in or otherwise enclosed, unless such rooms,

whether above or below ground, have free drainage by gravity to the surface of the ground.

D. Water supply treatment, if necessary, shall be in accordance with the requirements of the Pennsylvania Department of Environmental Protection.

4. *Water Storage Facilities*. All water storage reservoirs shall be covered, watertight and constructed of impervious material. Overflows and vents of such reservoirs shall be effectively screened. Manholes shall be constructed with overlapping covers, so as to prevent the entrance of contaminated material. Reservoir overflow pipes shall discharge through an acceptable air gap.

5. *Water Distribution Systems*.

A. All water piping, fixtures and other equipment shall be constructed and maintained in accordance with state and local regulations.

B. The water piping system shall not be connected with non-potable or questionable water supplies and shall be protected against the hazards of backflow or back siphonage.

C. The system shall be so designed and maintained as to provide a pressure of not less than 25 pounds per square inch, under normal operating conditions, at each mobile home, service buildings and other locations requiring potable water supply. The developer is required to provide all necessary engineering studies to ensure that there will be sufficient water pressure and flow to meet such requirement and for operation of fire protection systems.

D. *Individual Water Riser Pipes and Connections*.

(1) Individual water riser pipes shall be located within the confined area of the mobile home stand at a point where the water connection will approximate a vertical position, thereby insuring the shortest water connection possible and decreasing susceptibility to water pipe freezing.

(2) The water riser pipe shall have a minimum inside diameter of ¾ inch and terminate at least 4 inches above the ground surface. The water outlet shall be provided with a cap when a mobile home does not occupy the lot.

(3) Adequate provisions shall be made to prevent freezing of service lines, valves and riser pipes and to protect risers from heaving and thawing actions of ground during freezing weather. Surface drainage shall be diverted from the location of the riser pipe.

(4) A shut-off valve below the frost line shall be provided near the water riser pipe on each mobile home lot. Underground stop-and-waste valves are prohibited unless their type of manufacturer and their method of installation are approved.

(*Ord. 1999-2*, 1/11/1999, §1006)

§22-907. Sewage Disposal.

1. *General Requirements*.

A. If the mobile home park can be served by the extension of an existing public sanitary sewer system located within 1,000 feet of the proposed development and adequate treatment capacity is available, a complete sanitary sewage collection system must be installed and connected by the developer to the existing public

sanitary sewer system. Such system shall be designed, constructed and maintained in accordance with the Pennsylvania Department of Environmental Protection and the applicable municipality or municipal authority regulations. If adequate treatment capacity is not available or connection to the community sewer system shall be provided. The system design shall be approved by the Pennsylvania Department of Environmental Protection and Reading Township and/or the appropriate municipal authority. It shall be required as a condition of plan approval, that the owner agree to the provision that when public sewers are made available to the site, that the mobile home park be connected to such system and that all privately-owned wastewater treatment facilities be abandoned.

B. Regardless of the proposed method of sewage disposal, all systems shall be in conformance with the Reading Township Act 537 Official Sewage Facilities Plan. On-lot sewage disposal systems are not acceptable for mobile home parks.

2. *Design and Construction Standards*. Sanitary sewer systems and wastewater treatment facilities shall be designed and constructed in accordance with Township standards and the requirements of this Chapter. Where there is a conflict between this Section and any other section of this Chapter or other rules and regulations of the Township and/or the applicable Municipal Authority, the more stringent shall apply. Standards shall also be as recommended by the Township Engineer.

A. *Individual Sewer Connections*.

(1) Each mobile home lot shall be provided with at least a 4-inch diameter sewer riser pipe. The sewer riser pipe shall be so located on each stand so that the sewer connection to the mobile home drain outlet will approximate a vertical position.

(2) The sewer connection shall have a nominal inside diameter of not less than 4 inches, and the slope of any portion thereof shall be at least ¼ inch per foot. All joints shall be watertight.

(3) All materials used for sewer connections shall be semi-rigid, corrosive resistant, nonabsorbent and durable; the inner surface shall be smooth.

(4) Provisions shall be made for plugging the sewer riser pipe when a mobile home does not occupy the lot. Surface drainage shall be diverted away from the riser. The rim of the riser pipe shall extend at least ½ inch above ground elevation.

(5) If sanitary traps are not provided within the individual mobile home unit, it shall be installed in the sanitary sewer laterals.

B. *Sewer Lines*. All sewer lines shall be located in trenches of sufficient depth to be free of breakage from traffic or other movements and shall be separated from the park water supply system.

(*Ord. 1999-2*, 1/11/1999, §1007)

§22-908. Electrical Distribution System.

1. *General*. Every mobile home park shall contain an electrical wiring system consisting of wiring, fixtures equipment and appurtenances which shall be installed and maintained in accordance with the local electric power company's specifications regulating such systems. All electrical system materials and installation shall be

consistent with the National Electric Code as most recently amended.

2. *Power Distribution Lines*. All power distribution lines shall be installed underground in accordance with the suppliers regulations. All other utilities, such as telephone, community cable television service, etc., shall also be installed underground in accordance with the individual utility's specifications governing such systems.

3. *Individual Electrical Connections*. Each mobile home lot shall be provided with an approved disconnecting device and overcurrent protective equipment. The minimum service per outlet shall be 120/240 volts AC, 100 amperes.

4. *Required Grounding*. All exposed noncurrent carrying metal parts of mobile homes and all other equipment shall be grounded by means of an approved grounding conductor run with branch circuit conductors or other approved method of grounded metallic wiring. The neutral conductor shall not be used as an equipment ground for mobile homes or other equipment.

(*Ord. 1999-2*, 1/11/1999, §1008)

§22-909. Service Buildings and Other Community Service Facilities.

1. *Applicability*. The requirements of this Section shall apply to service buildings, recreational buildings and other community service facilities when constructed such as:

A. Management offices, repair shops and storage area.

B. Laundry facilities.

C. Indoor recreation areas.

D. Commercial uses supplying essential goods or services for the exclusive use of park occupants.

2. *Structural Requirements for Buildings*.

A. All portions of the structure shall be properly protected from damage by ordinary uses and by decay, corrosion, termites and other destructive elements. Exterior portions shall be of such materials and be so constructed and protected as to prevent entrance or penetration of moisture and weather.

B. All rooms containing laundry facilities shall:

(1) Have at least one window or skylight facing directly to the outdoors. The minimum aggregate gross area of windows for each required room shall be not less than 10 percent of the floor area served by them.

(2) Have at least one window which can be easily opened, or a mechanical device which will adequately ventilate the room.

C. Toilets shall be located in separate compartments equipped with self-closing doors. Toilets shall have sound resistant walls extending to the ceiling between male and female sanitary facilities. Walls and partitions in lavatories and other plumbing fixtures shall be constructed of dense, non-absorbent, waterproof material or covered with moisture-resistant material.

(*Ord. 1999-2*, 1/11/1999, §1010)

§22-910. Refuse Handling.

The storage, collection and disposal of refuse in the mobile home park shall be so conducted as to create no health hazards, rodent harborage, insect breeding areas,

accident or fire hazards or air pollution. All applicable local, State, and Federal regulations shall be complied with. The plans shall outline the proposed method of refuse disposal.

(*Ord. 1999-2*, 1/11/1999, §1011)

§22-911. Insect and Rodent Control.

Grounds, buildings and structures shall be maintained free of insect and rodent harborage and infestation. Extermination and other methods of rodent control shall comply with any applicable local, State, and Federal regulations.

(*Ord. 1999-2*, 1/11/1999, §1011)

§22-912. Fuel Supply and Storage.

1. *Natural Gas Systems*.

A. Natural gas piping systems when installed in mobile home parks shall be approved by the utility company providing the service.

B. Each mobile home lot provided with piped gas shall have an approved shut-off valve installed upstream of the gas outlet. The outlet shall be equipped with an approved cap to prevent accidental discharge of gas when the outlet is not in use.

2. *Liquified Petroleum Gas System*.

A. Liquefied petroleum gas systems provided for mobile homes, service buildings or other structures when installed shall be maintained in conformity with any applicable rules and regulations and shall include the following:

(1) Systems shall be approved with safety devices to relieve excessive pressure and shall be arranged so that the discharge terminates at a safe location.

(2) Systems shall have at least one accessible means of shutting off the gas. Such means shall be located outside the mobile home and shall be maintained in effective operating condition.

(3) All LPG piping outside the mobile home shall be buried and protected against mechanical injury. Undiluted liquefied petroleum gas in liquid form shall not be conveyed through piping equipment and systems in mobile home.

(4) No LPG vessel shall be stored or located inside or beneath any storage cabinet, carport, mobile home, or any other structure unless such installations are specifically approved by the Township.

3. *Fuel Oil Supply Systems*.

A. All fuel oil supply systems provided for mobile homes, service buildings, and other structures shall be installed and maintained in conformity with any applicable rules and regulations.

B. All storage tanks shall be protected from physical damage.

C. All fuel oil supply systems provided for mobile homes, service buildings, and other structures shall have shutoff valves located within 5 inches of storage tank.

D. All fuel storage tanks and cylinders shall be securely placed and under no

circumstances located less than 5 feet from any mobile home exit.

4. *Storage Tank Foundations*. All fuel tanks not withstanding the type of fuel shall be provided with a stable foundation of compacted stone or concrete and anchoring, or as may be required by any applicable regulation whichever is more stringent.

(*Ord. 1999-2*, 1/11/1999, §1012)

§22-913. Fire Protection.

1. Fire protection systems shall be provided per §22-506 of this Chapter.

2. In addition the following shall apply:

A. All applicable local, State, and Federal regulations, shall be complied with.

B. Each individual mobile home shall be equipped with two working fire extinguishers.

C. In the event the applicant wishes to provide alternate means of fire protection, design information shall be subject to review by the Township, Township Engineer, and the local fire agency, and shall be subject to approval by the Township.

(*Ord. 1999-2*, 1/11/1999, §1013)

§22-914. Single Mobile Homes.

1. Any single mobile home shall meet the specifications for manufacture of mobile homes as set forth in U.S. Standard A 119.1-1969, NFPA No. 501B-1968, and any subsequent modification or amendment of such standards. Certification to such shall be submitted with the mobile home permit application.

2. If a mobile home is erected and maintained as a single-family dwelling other than in a mobile home park, the lot size, setback, sewer, and water requirements shall be the same as for a single-family home, provided however that placement and base enclosure requirements shall be the same as for mobile homes placed in mobile home parks.

(*Ord. 1999-2*, 1/11/1999, §1014)

§22-915. Responsibilities of the Park Management.

1. The person to whom a license for a mobile home park is issued shall operate the park in compliance with this Chapter and shall provide adequate supervision to maintain the park, its facilities and equipment in good repair, and in clean and sanitary condition.

2. The park management shall supervise the placement of each mobile home on its mobile home lot. This includes securing its stability and installing all utility connections. All mobile homes shall be inspected by the Township.

3. The park management shall give the Township Officials free access to all mobile home lots, service buildings and other community service facilities for the purpose of inspections.

4. The management shall maintain a register containing the names of all park occupants. Such register shall be available to any authorized person inspecting the

park.

5. A permit shall be obtained by the park management prior to placement of all structures and mobile homes in accordance with applicable Township ordinances.

(*Ord. 1999-2*, 1/11/1999, §1015)

§22-916. Guidelines for Rules, Regulations and Agreements Between Mobile Home Park Operators and Tenants.

1. The following is a listing of minimum requirements that shall be included within a set of rules and regulations developed by each mobile home park operator to inform each prospective tenant of the parks operating policies.

2. The tenants/owner agreement shall be submitted to the Township for review and recommendation. The agreement shall be reviewed and approved by the Township prior to final plan approval and shall be recorded with the final plan. A copy which shall be on file at the mobile home park and Township office.

A. Number of pets allowed and other restrictions.

B. Speed limits and traffic control within the park.

C. Rent payment provisions and sub-letting policies.

D. Garbage collection schedules.

E. Vehicular ownership and maintenance restrictions.

F. Responsibilities of the tenant regarding behavior, including that of children and visitors.

G. Policies regarding swimming pools, mobile home skirting and other lot improvements required by operator or desired by tenants.

H. Maintenance responsibilities of each tenant.

I. Maintenance and use of common areas (i.e., recreation areas).

J. Requirement that tenant inspect and maintain in adequate operation gas, electric, and fire protection systems and equipment.

(*Ord. 1999-2*, 1/11/1999, §1016)

§22-917. Facilities.

1. Every mobile home park shall have a structure clearly designated as the office of the mobile home park manager.

2. Service and accessory buildings located in a mobile home park shall be used only by the residents of the mobile home park.

(*Ord. 1999-2*, 1/11/1999, §1017)

§22-918. Removal of Mobile Homes.

1. No mobile home, whether installed on a single lot or in a mobile home park, shall be removed from the Township without first obtaining a Permit from the Township Tax Collector as required by Act of October 27, 2010, P.L. 895, No. 93, §2, 53 Pa.C.S.A. §8821(d). [*Ord. 2014-01*]

2. Such permit shall be issued upon payment of a fee as required by the fee schedule currently in force in the Township, and any real estate tax assessed against

the home and unpaid at the time the permit is requested.

(*Ord. 1999-2*, 1/11/1999, §1018; as amended by *Ord. 2014-01*, 4/21/2014)

§22-919. Notices and Revocation of License.

1. *Notices*. Whenever the Township Supervisors or other authorized Township representative determines that there are reasonable grounds to believe that there has been a violation of any provision of this Chapter, or of any regulation adopted pursuant thereto, such authority shall give notice of such alleged violation to the person to whom the permit, and/or certificate and/or license was issued, as hereinafter provided. Such notice shall (A) be in writing; (B) include a statement of reasons for its issuance; (C) allow a reasonable time for the performance of any act it requires; (D) be served upon the owner or his agent as the case may require; provided, however, that such notice or order shall be deemed to have been properly served upon such owner or agent when a copy thereof has been served with such notice by any other method authorized or required by the laws of this State; (E) contain an outline of remedial action which, if taken, will effect compliance with the provisions of this Chapter, or any part thereof, and with the regulations adopted pursuant thereto.

2. *Revocation of License*. In addition to the provisions and penalties for violations as given in §§22-916 and 22-917 of this Chapter, the Township may give reasonable notice for the remedying of violations and if such violations are not remedied within the prescribed period of time, the Township may declare the license revoked.

(*Ord. 1999-2*, 1/11/1999, §1019)

§22-920. Enforcement and Penalties.

1. Duly authorized representatives of Reading Township have the right to enter private property at reasonable times to investigate any condition associated with this Chapter.

2. Anyone violating the provisions of this Chapter shall be guilty of an offense, and upon conviction shall be subject to a fine of not more than $600 for each violation, recoverable with costs, and in default of payment, imprisonment of not more than 30 days. Each day that the violation continues shall be a separate offense.

3. In addition, Reading Township may institute injunctive, mandamus or any other appropriate action or proceeding at law or in equity for the enforcement of this Chapter. Any court of competent jurisdiction shall have the right to issue restraining orders, temporary or permanent injunctions, mandamus, or other appropriate forms of remedy or relief.

(*Ord. 1999-2*, 1/11/1999, §1020)

Attachment 22-9-1

APPLICATION FOR MOBILE HOME PARK PERMIT
READING TOWNSHIP, ADAMS COUNTY, PA

The undersigned hereby applies for approval under the Reading Township Subdivision and Land Development Ordinance for placement of one (1) mobile home, as described below;

1. Name of Property Owner _____
   Address _____
   Phone No. _____

2. Name of Applicant (if other than Owner) _____
   Address _____
   Phone No. _____

3. Name of Occupant _____
   Current Address _____

4. Unit Location _____
   Section _____ Lot No. _____

5. Mobile Home Registration Number _____

6. Please attach a Plot Plan containing the items shown on page 2

The undersigned hereby represents that they are authorized to execute this application and that the information provided herein is true and accurate to the best of their knowledge.

_____ _____
Signature Date

MOBILE HOME PERMIT
Reading Township
Adams County, Pennsylvania

PERMIT NO. _____

The property of _____
located at _____
has received approval for the placement of one (1) mobile home, as described herein, and in accordance with the Reading Township Subdivision and Land Development Ordinance.

Approved By: _____

Date: _____

Expiration Date: _____

Attachment 22-9-1

GENERAL PLAN

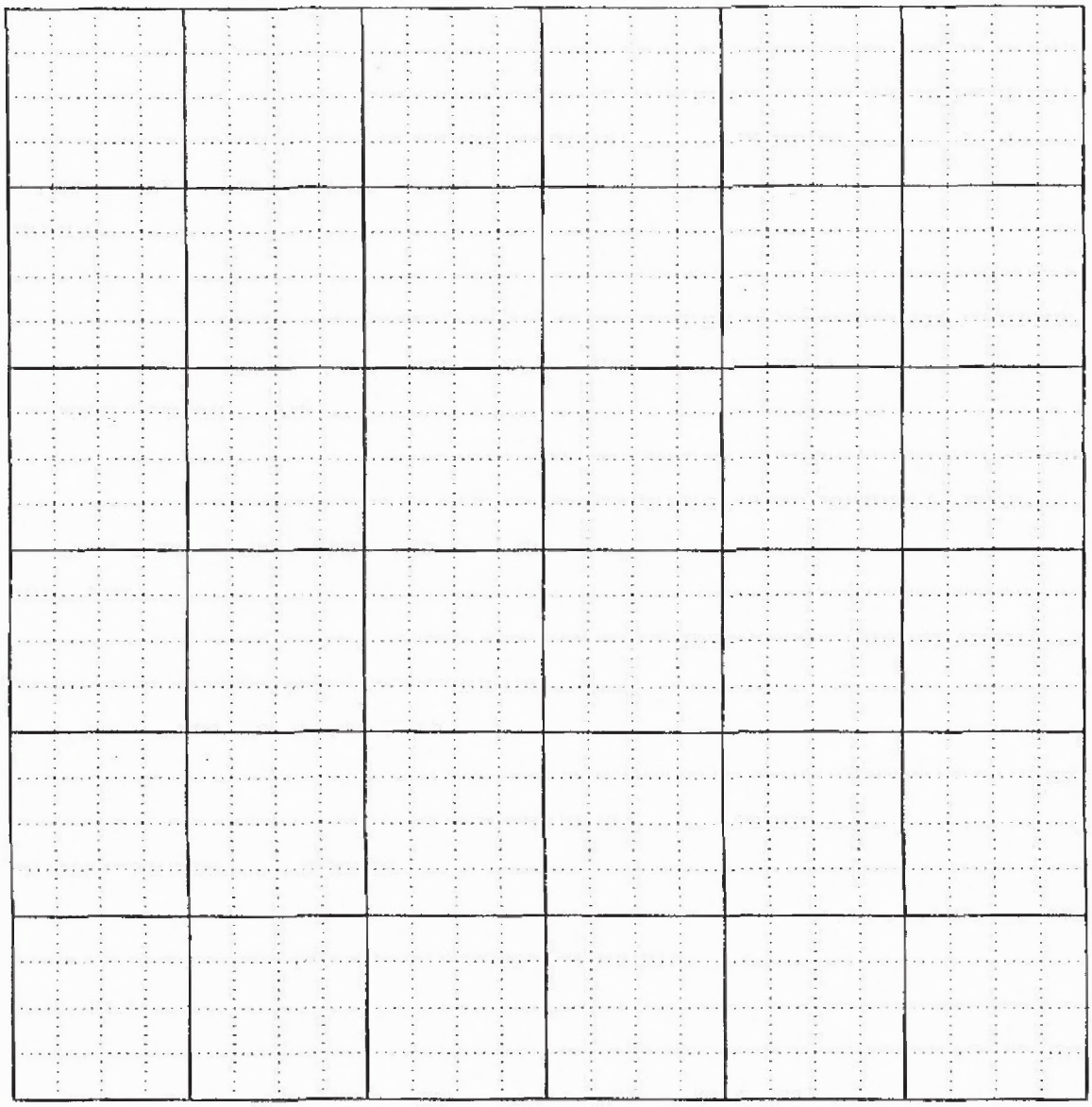

SCALE: 1" = _____ (4 SQUARES PER INCH)

The following shall be shown on the Plan:

Buildings/Mobile Home	Parking	Streets
Driveways	Sanitary Sewer	Water Supply
Lot Configuration	Storm Sewer	Swales

Attachment 22-9-2

APPLICATION FOR MOBILE HOME PARK LICENSE
READING TOWNSHIP, ADAMS COUNTY, PA

The undersigned hereby applies for approval under the Reading Township Subdivision and Land Development Ordinance for a permit to construct and a license to operate a mobile home park, as described below;

1. Name of Property Owner _____
   Address _____
   Phone No. (_____) _____

2. Name of Applicant (if other than Owner)_____
   Address _____
   Phone No. (_____) _____

3. Name of Mobile Home Park _____
   Location _____

4. Adams County Recorder of Deeds Mobile Home Park Plan
   Book No. _____ Page _____

5. Name of Operator / Manager _____
   Address _____
   Phone No. (_____) _____

6. The undersigned hereby acknowledges the following;

- The mobile home park will conform with the rules and regulations stated in the Reading Township Subdivision and Land Development Ordinance, hereinafter referred to as the "Ordinance";
- An easily identifiable and permanent mobile home park office will be provided on-site;
- All mobile home units will be anchored to a mobile home stand, in accordance with the Ordinance;
- Skirting will be installed and hitching removed for all mobile homes, in accordance with the Ordinance;
- The storage, collection, and disposal of refuse in the mobile home park will be managed in accordance with the Ordinance;
- The mobile home park will be kept free of litter, rubbish, and other unprotected flammable materials;
- Portable, hand operated fire extinguishers will be provided in each community building and mobile home, in accordance with the Ordinance;
- The mobile home park manager will consult annually with the appropriate fire company;

Attachment 22-9-2

- The mobile home park will continually maintain in functional condition all facilities, including but not limited to cartways, parking areas, drainage, water supply, sewage disposal, skirting, storage buildings and community buildings;
- A register of all occupants will be maintained;
- Burning of trash and rubbish will be prohibited;
- Mobile homes will not be occupied by a greater number of occupants than which they are designed to accommodate;
- Representatives of Reading Township have permission to enter the mobile home park for the purpose of inspecting and investigating conditions relative to the enforcement of this Ordinance.

_____ _____

Signature Date

MOBILE HOME PARK PERMIT TO CONSTRUCT
Reading Township
Adams County, Pennsylvania

PERMIT NO. _____

The property of _____
located at _____
has received approval for construction of a mobile home park as described herein, and in accordance with the Reading Township Subdivision and Land Development Ordinance and approved Final Land Development Plan.

Approved By: _____

Date: _____

Expiration Date: _____

Exhibit 22-1

READING TOWNSHIP, ADAMS COUNTY, PENNSYLVANIA
SUBDIVISION AND LAND DEVELOPMENT PLAN PROCEDURE

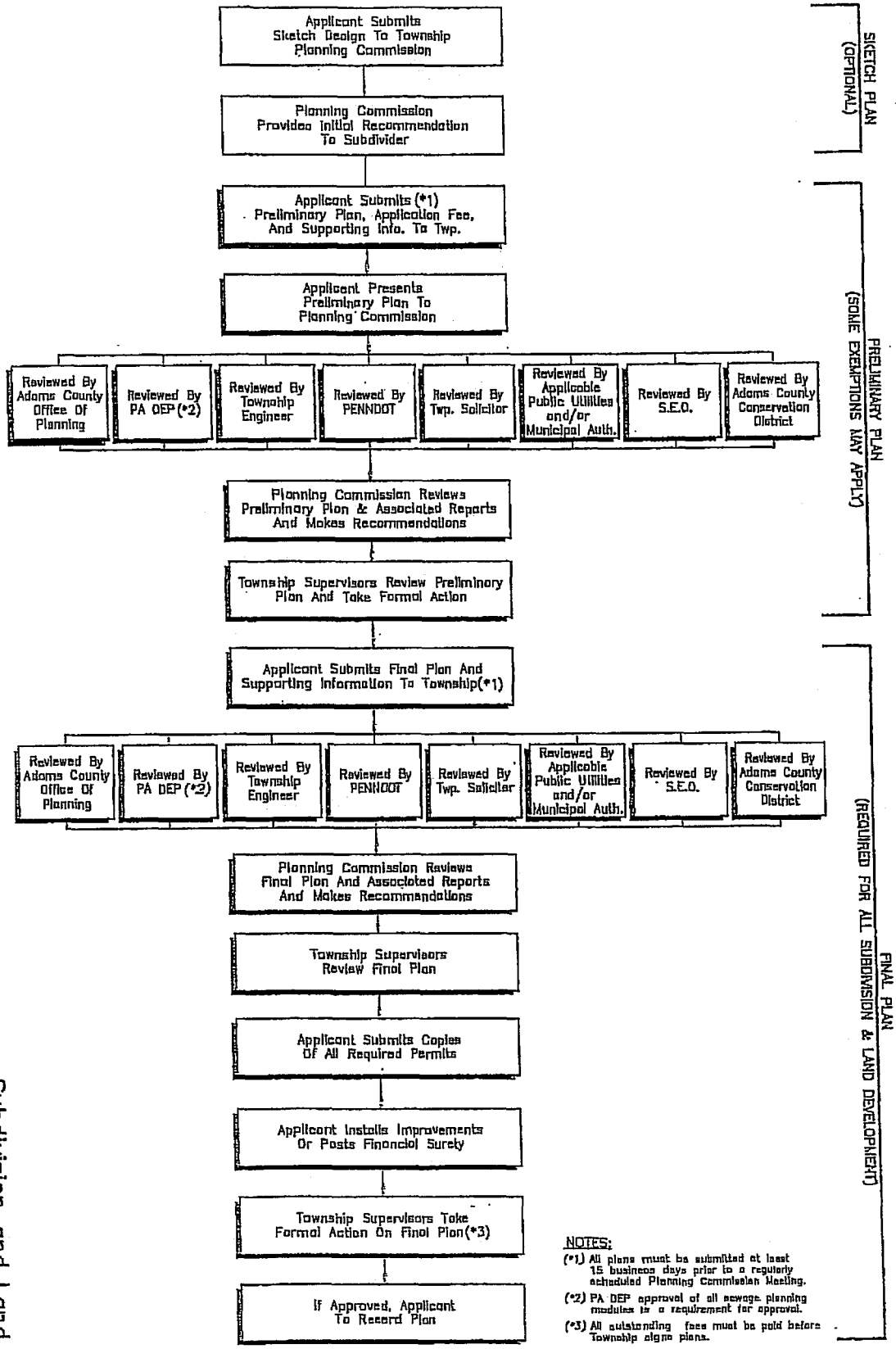

Subdivision and Land Development Plan Procedure

Exhibit 22-2

APPLICATION for SUBDIVISION or LAND DEVELOPMENT
Reading Township, Adams County, Pennsylvania

File Number _____

Plan Type: ☐ Subdivision ☐ Land Development

Subdivision or Development Name: _____

Location of Subdivision or Development: _____

_____

Permanent Parcel Number (Deed Reference): _____

Existing Zoning: _____ Existing Use: _____

Total Acreage: _____ Number of Lots: _____

Sewage System: _____

Plan Submitted:

(___) Sketch (___) Preliminary (___) Final

Developer or Owner's Name: _____

Address: _____

City: _____ State: _____ Zip: _____ Phone: _____

Registered Engineer or Surveyor's Name: _____

Address: _____

City: _____ State: _____ Zip: _____ Phone: _____

Supplementary Information Submitted:

- ☐ Sanitary Sewage Facilities Planning Module
- ☐ Stormwater Management Plan
- ☐ Erosion and Sediment Control Plan
- ☐ Groundwater Feasibility Study
- ☐ Traffic Impact Study
- ☐ Additional (Specify): _____

Owner's Certification:

I hereby attest that the information on this form, to the best of my knowledge, is true and accurate. Furthermore, I hereby grant permission for members of the Reading Township Planning Commission / Supervisors or appropriate designated representatives to enter the subject property for the purpose of reviewing information relative to this application.

Applicant's Name: _____ Title: _____

Applicant's Signature: _____ Date: _____

Application Accepted By:

Name: _____ Title: _____

Signature: _____ Date: _____

For Office Use Only

Date / Time Application filed: _____, 200__ at _____ A.M. / P.M.

Application Fee (Per Township Fee Schedule): Administrative: _____

Engineering/Legal: _____

Total Fee Amount: _____ Date Paid: _____ Check No. (if applicable): _____

Date Planning Commission Meeting: _____

Exhibit 22-3

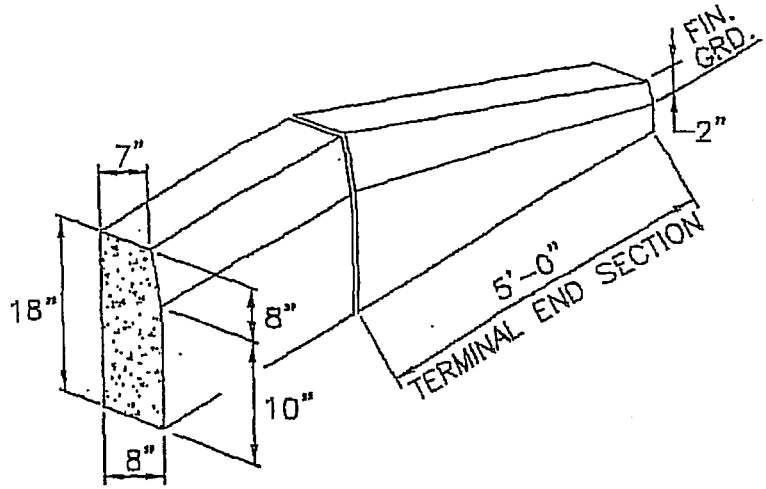

CURB TERMINAL END

SCALE: N.T.S.

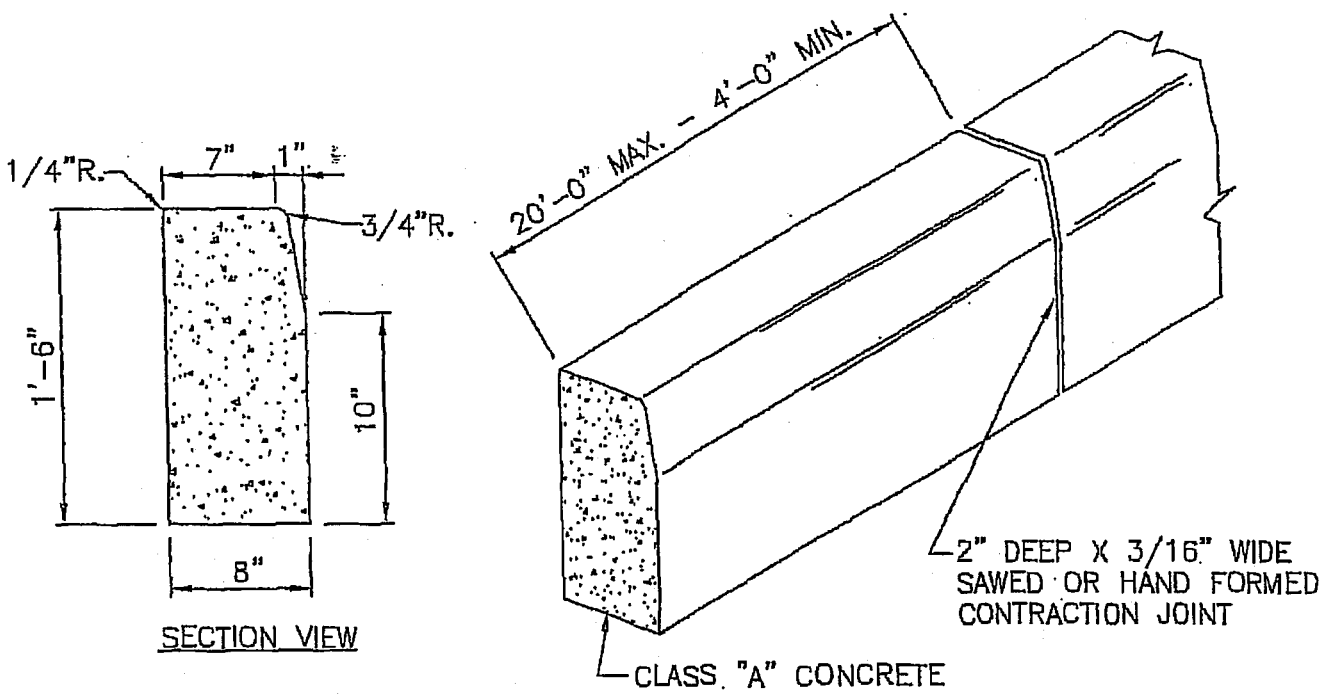

CONCRETE CURB DETAIL

SCALE: N.T.S.

NOTES:

1. CONSTRUCT IN ACCORDANCE WITH PDT PUB. 408 AND ANY APPLICABLE TOWNSHIP SPECIFICATIONS.

2. PROVIDE JOINT MATERIAL WHERE JOINING TO EXISTING CURB.

	SCALE: NOT TO SCALE	READING TOWNSHIP
22-119	DATE: 02/03/04	TYPICAL CURB DETAILS

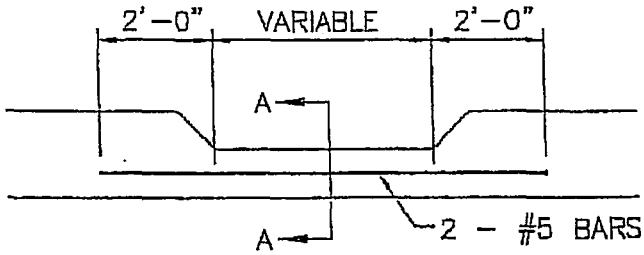

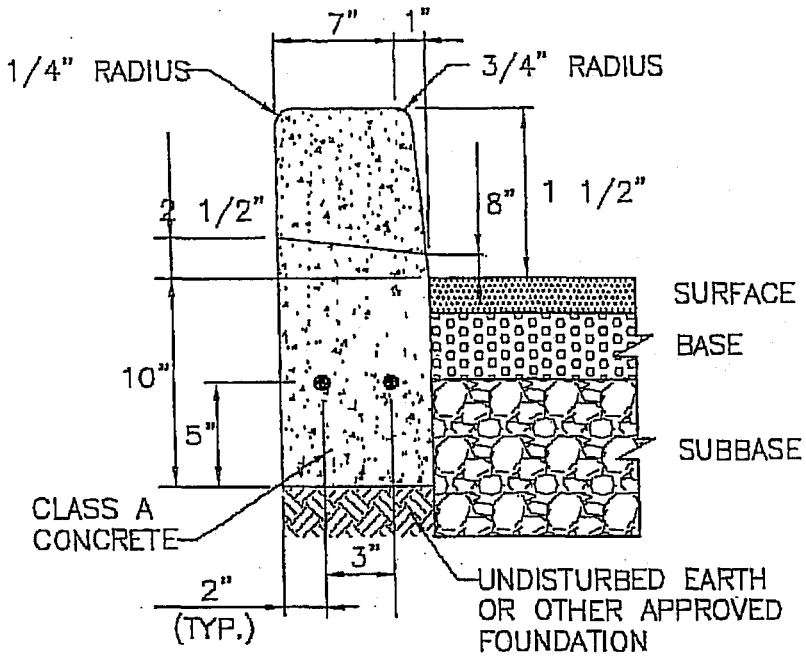

SECTION A–A

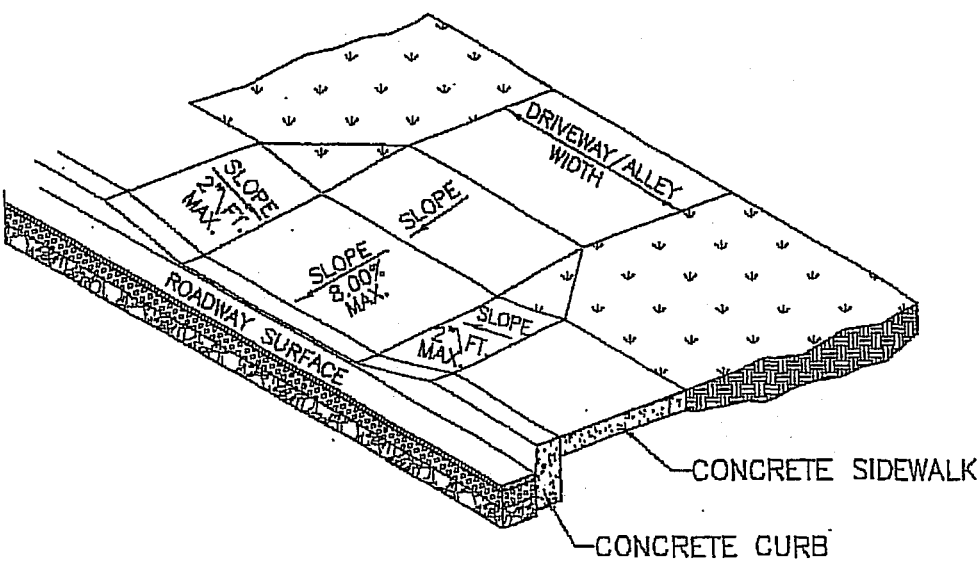

DEPRESSED CURB/DRIVEWAY DETAIL

SCALE: N.T.S.

22-120	SCALE: NOT TO SCALE	READING TOWNSHIP
	DATE: 02/03/04	TYPICAL DEPRESSED CURB DETAILS

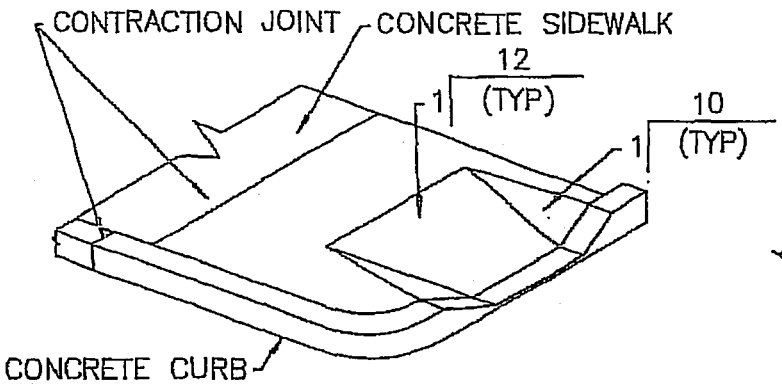

DEPRESSED CURB DETAIL

SCALE: N.T.S.

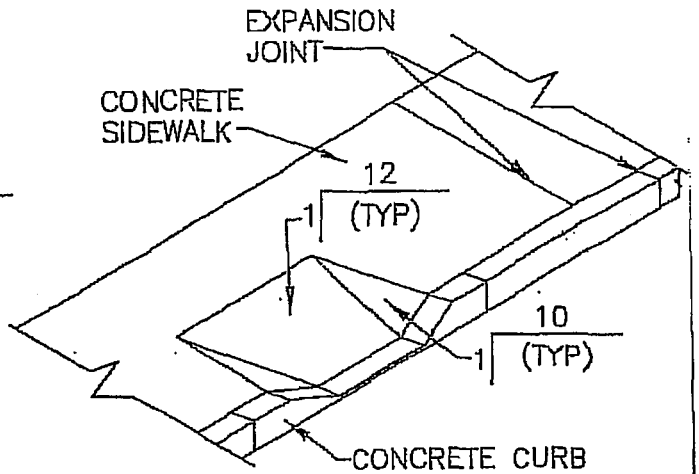

DEPRESSED CURB / HANDICAP RAMP DETAIL

SCALE: N.T.S.

1. ALL HANDICAP ACCESS FACILITIES SHALL BE CONSTRUCTED IN ACCORDANCE WITH ADA REQUIREMENTS.

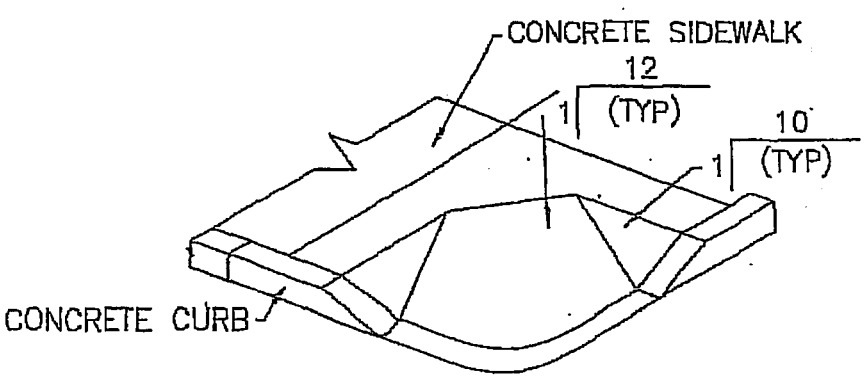

DEPRESSED CURB (CORNER) DETAIL

SCALE: N.T.S.

	SCALE: NOT TO SCALE	READING TOWNSHIP
22-121	DATE: 02/03/04	TYPICAL DEPRESSED CURB DETAILS

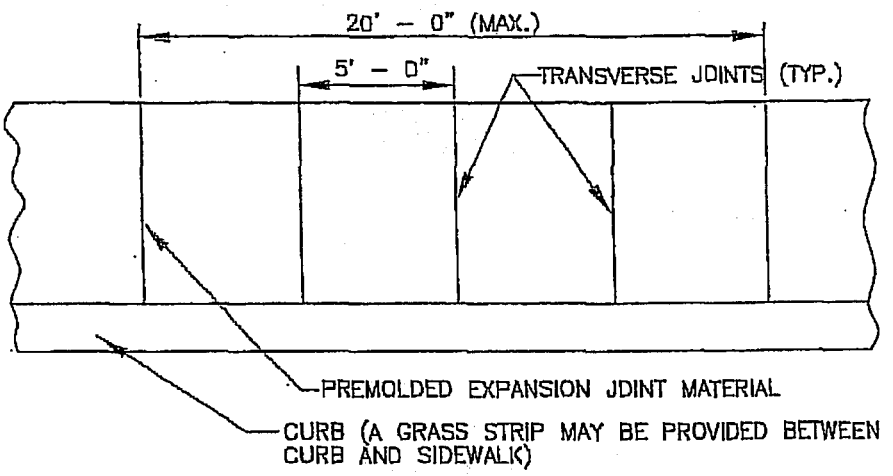

PLAN VIEW – CONC. SIDEWALK

SCALE: N.T.S.

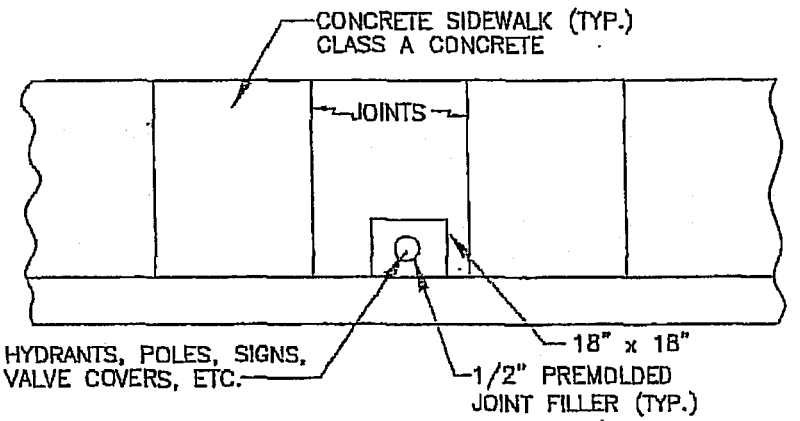

PLAN VIEW

UTILITY PROTRUSION IN SIDEWALK

SCALE: N.T.S.

	SCALE: NOT TO SCALE	READING TOWNSHIP
22-122	DATE: 02/03/04	TYPICAL SIDEWALK DETAILS

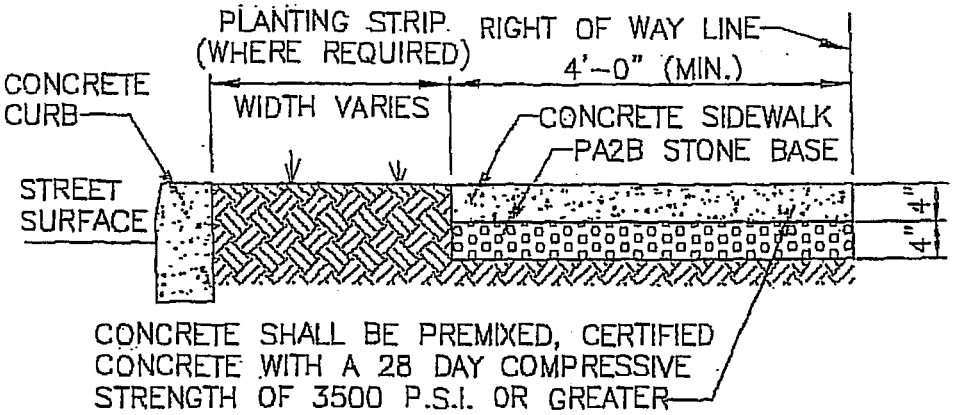

SIDEWALK SECTION VIEW (ALONG STREET)

SCALE: N.T.S.

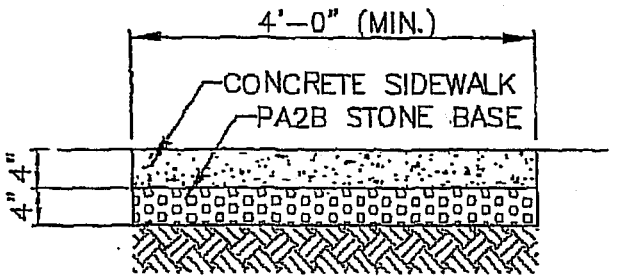

SIDEWALK SECTION VIEW

SCALE: N.T.S.

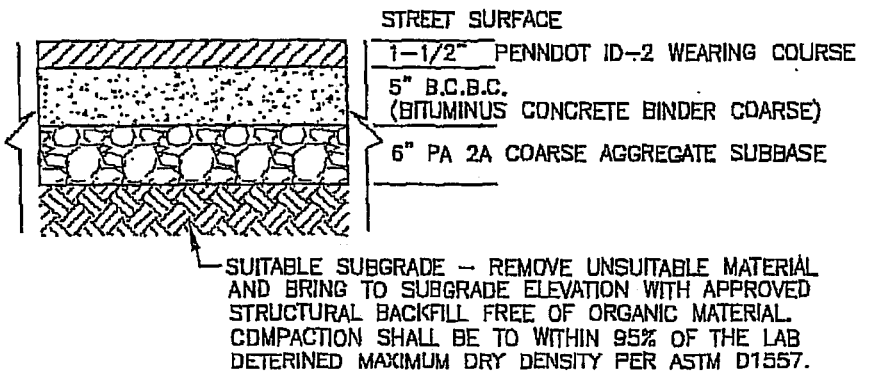

STREET PAVEMENT DETAIL

SCALE: N.T.S.

NOTES:

1. PROVIDE TOWNSHIP APPROVED PAVEMENT JOINT AND SEAL WITH AC-20.
2. PAINT ALL VERTICAL FACES WITH AC-20 PRIOR TO PAVING.

22-123	SCALE: NOT TO SCALE	READING TOWNSHIP
	DATE: 02/03/04	TYPICAL SIDEWALK & PAVEMENT DETAILS

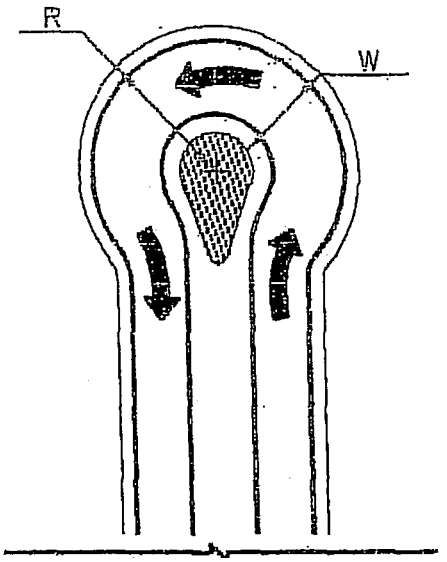

CIRCULAR
W/ ISLAND
SCALE: N.T.S.

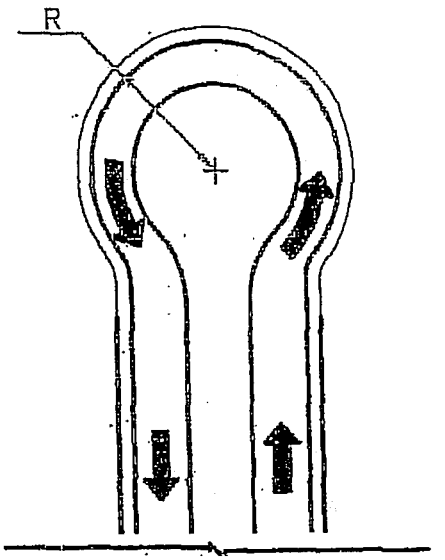

CIRCULAR
SCALE: N.T.S.

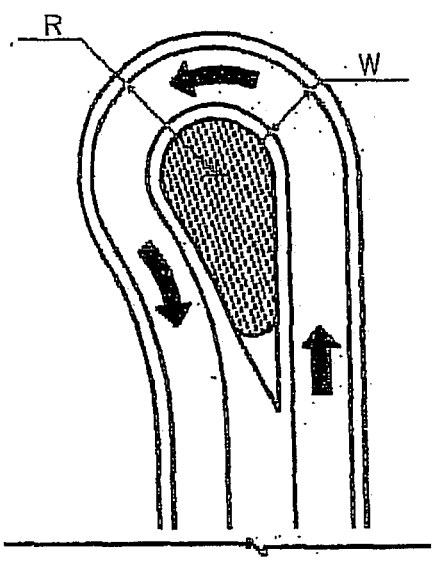

CIRCULAR
OFFSET
W/ ISLAND
SCALE: N.T.S.

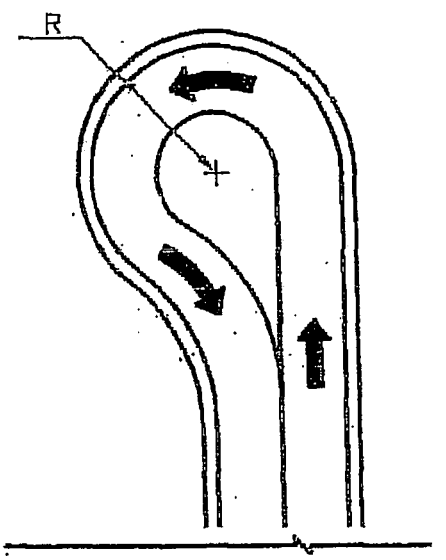

CIRCULAR
OFFSET
SCALE: N.T.S.

DESIGN VEHICLE

P	=PASSENGER VEHICLE
SU	=SINGLE UNIT TRUCK
WB-40	=INTERMEDIATE SEMI-TRAILER
WB-50	=LARGE SEMI-TRAILER

DESIGN VEHICLE	R	W
P	30'	18'
SU	47'	30'
WB-40	42'	25'
WB-50	47'	30'

	SCALE: NOT TO SCALE	READING TOWNSHIP
22-124	DATE: 02/03/04	TYPICAL CUL DE SAC DETAILS

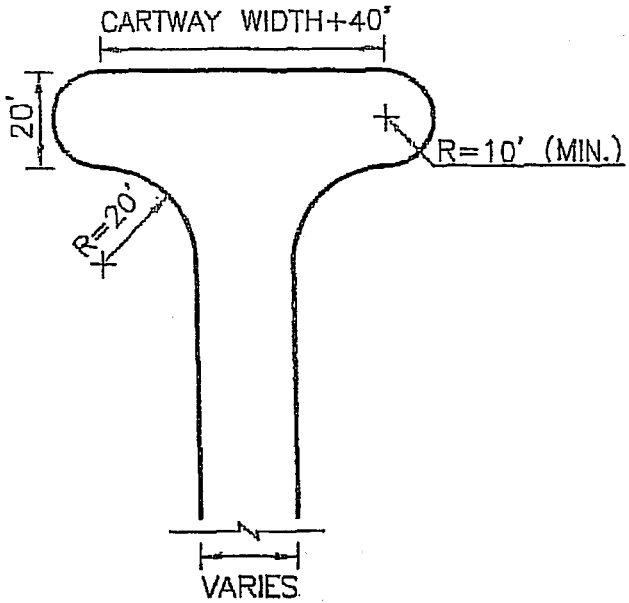

HAMMERHEAD DETAIL

SCALE: N.T.S.

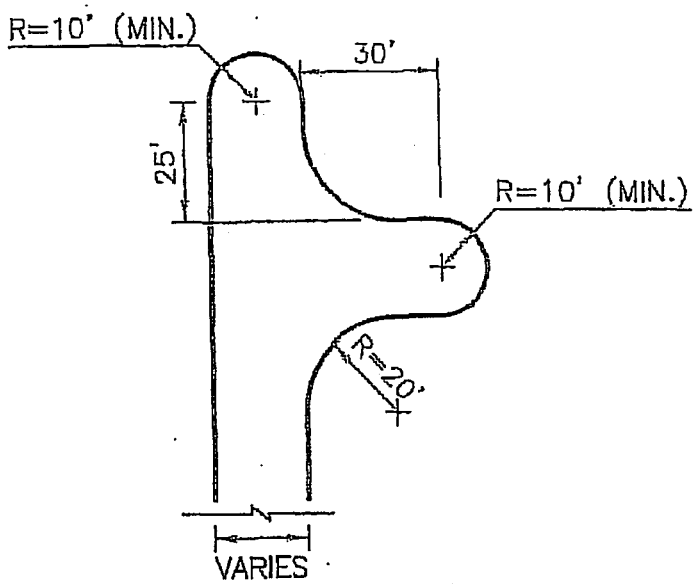

GOOSENECK DETAIL

SCALE: N.T.S.

SCALE: NOT TO SCALE	READING TOWNSHIP
DATE: 02/03/04	TYPICAL CUL DE SAC DETAILS

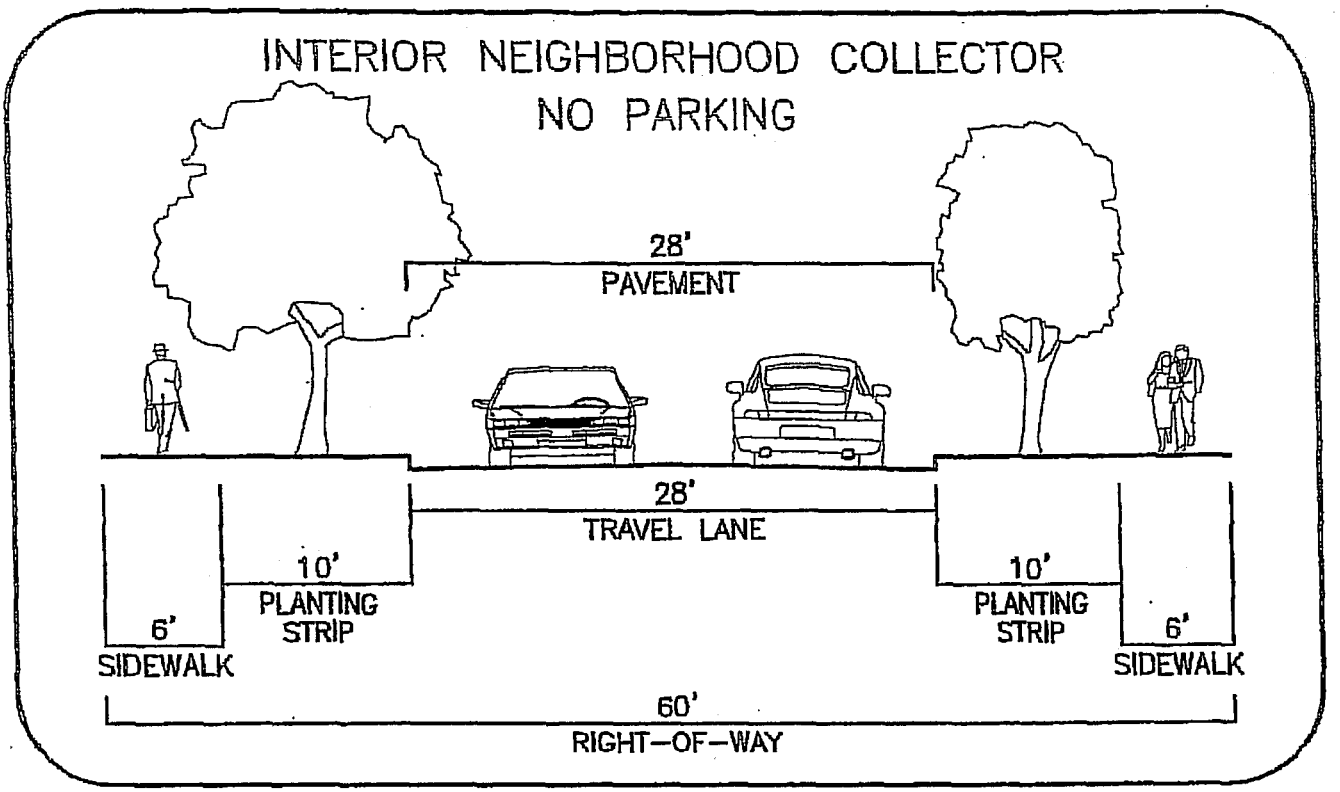

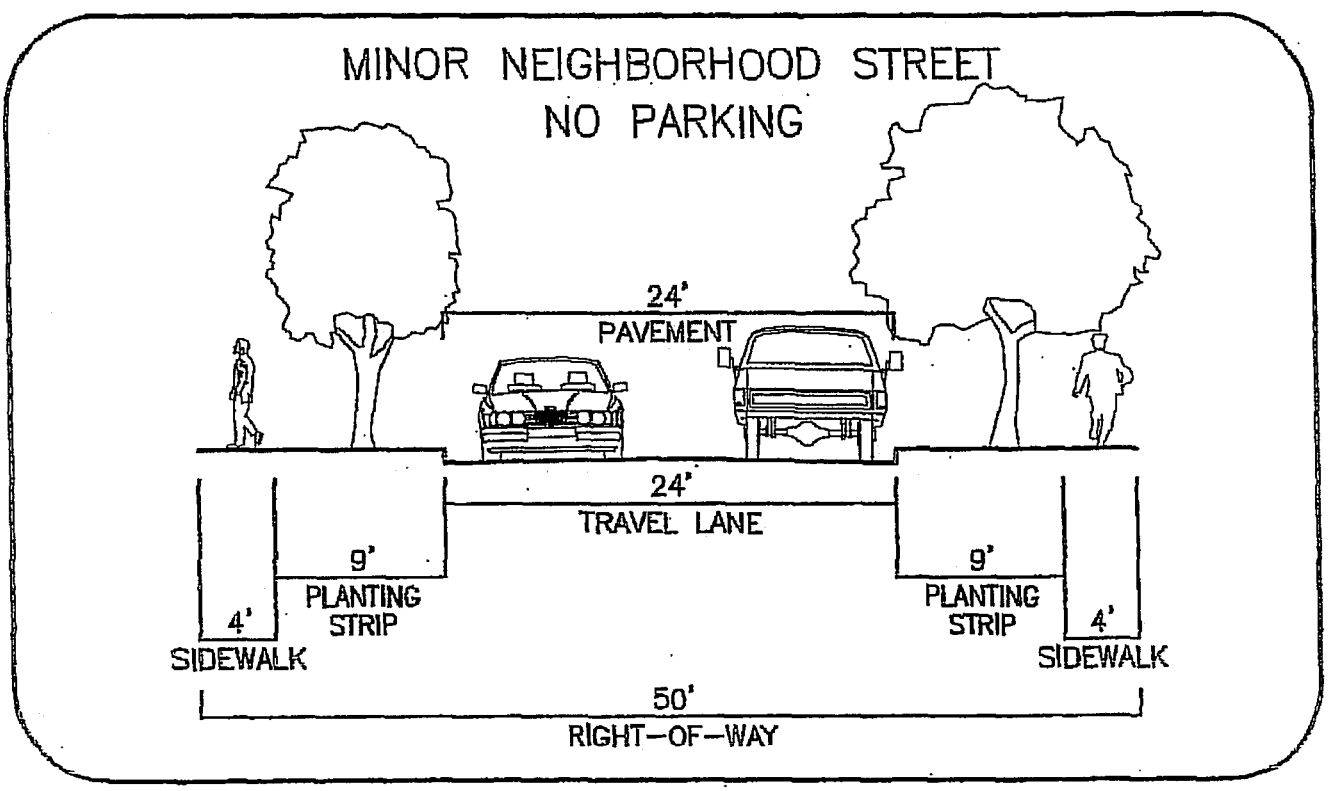

NOTE:
ALL PLANTING STRIPS INCLUDE 8" WIDE CURB

22-126	SCALE: NOT TO SCALE	READING TOWNSHIP
	DATE: 10/20/03	TYPICAL ROADWAY DETAILS

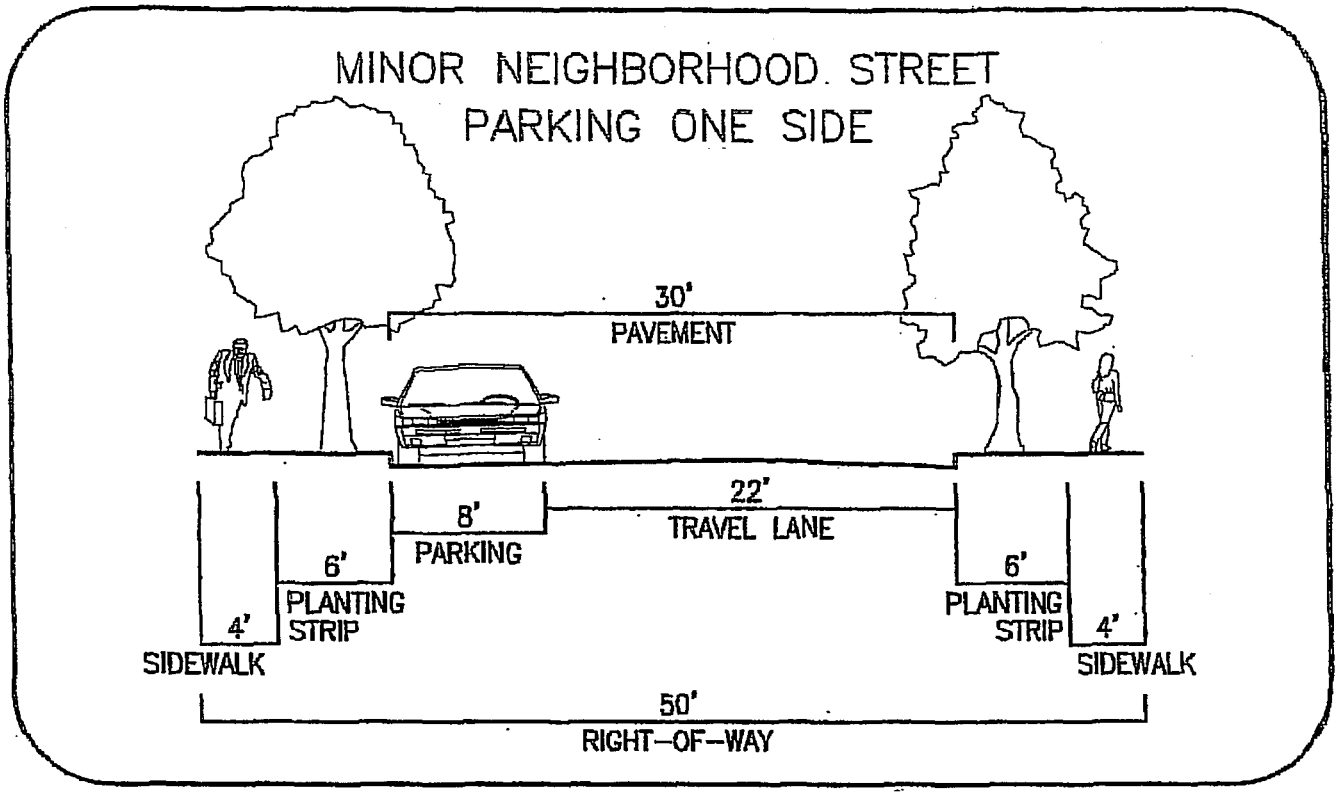

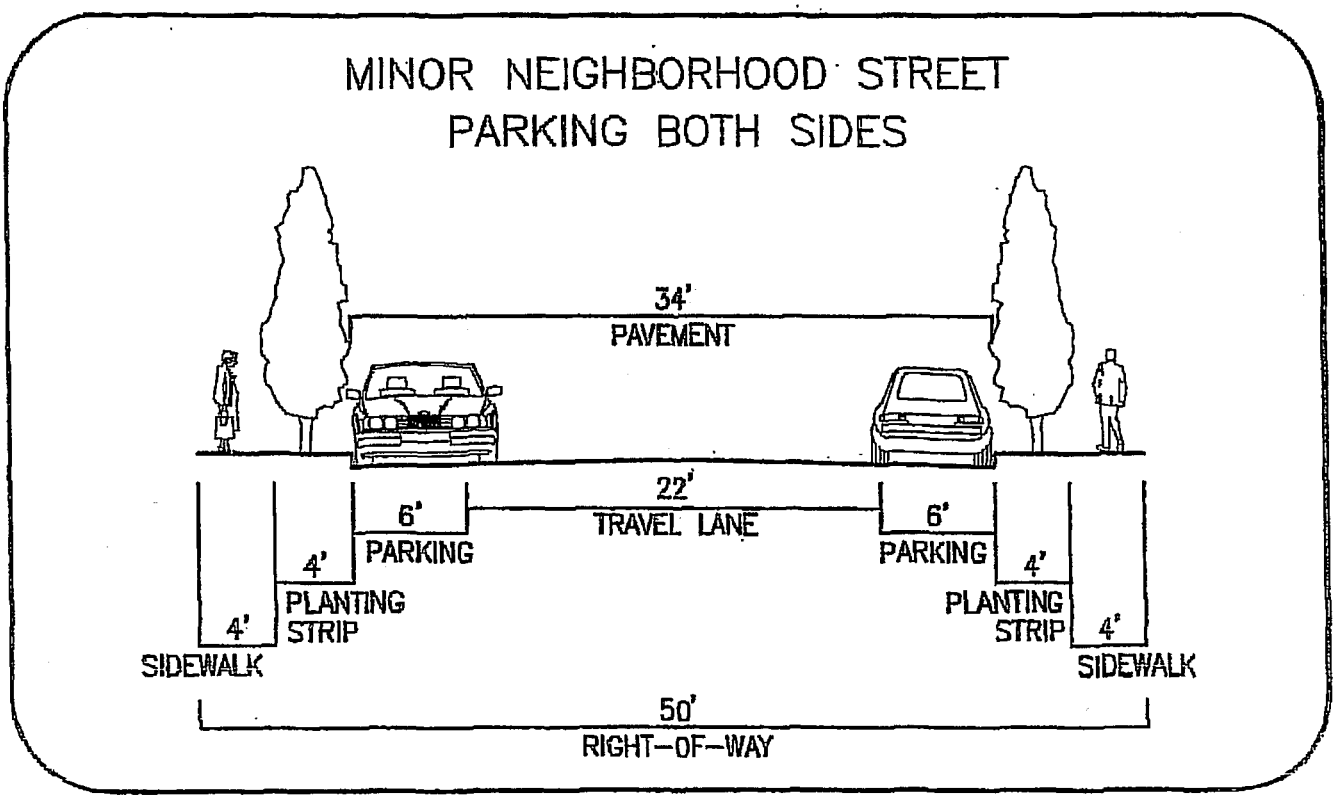

NOTE:
ALL PLANTING STRIPS INCLUDE 8" WIDE CURB

SCALE: NOT TO SCALE	READING TOWNSHIP
DATE: 10/20/03	TYPICAL ROADWAY DETAILS

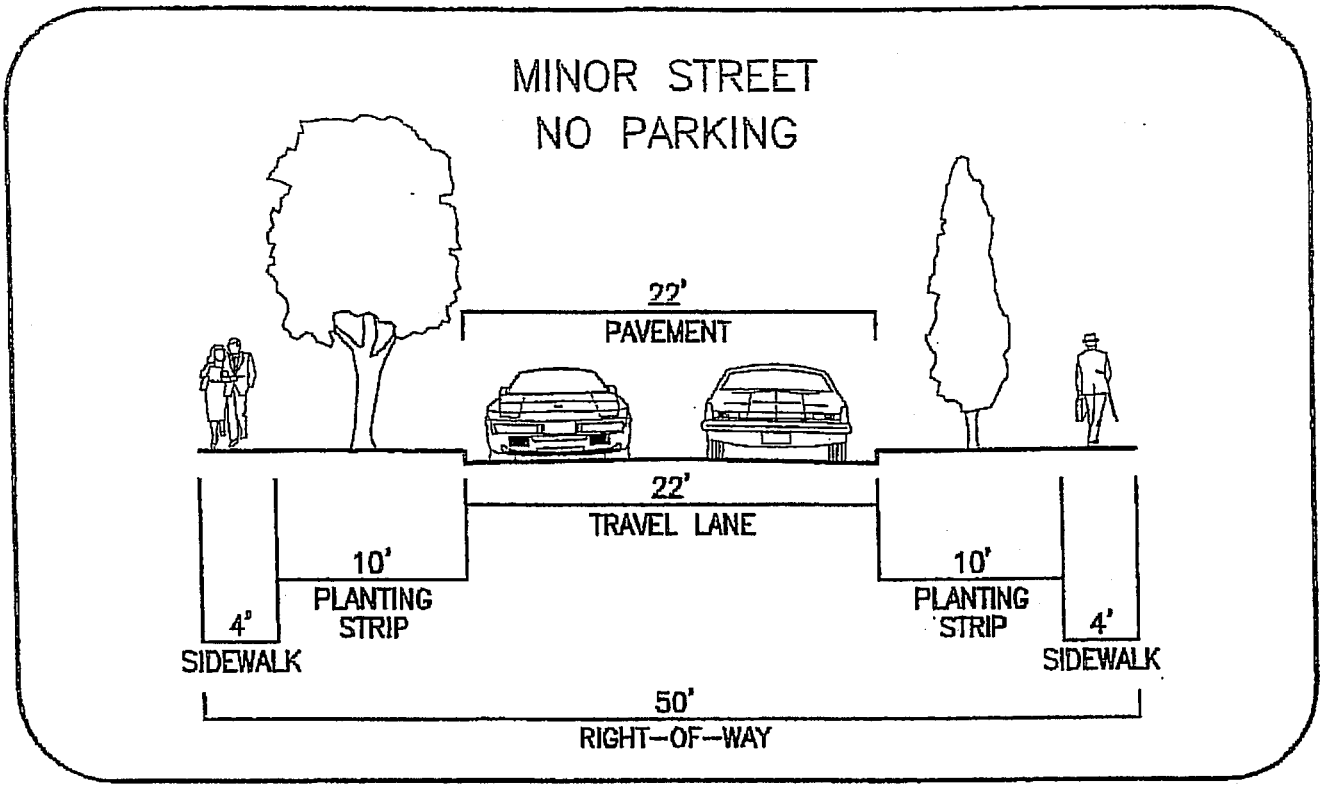

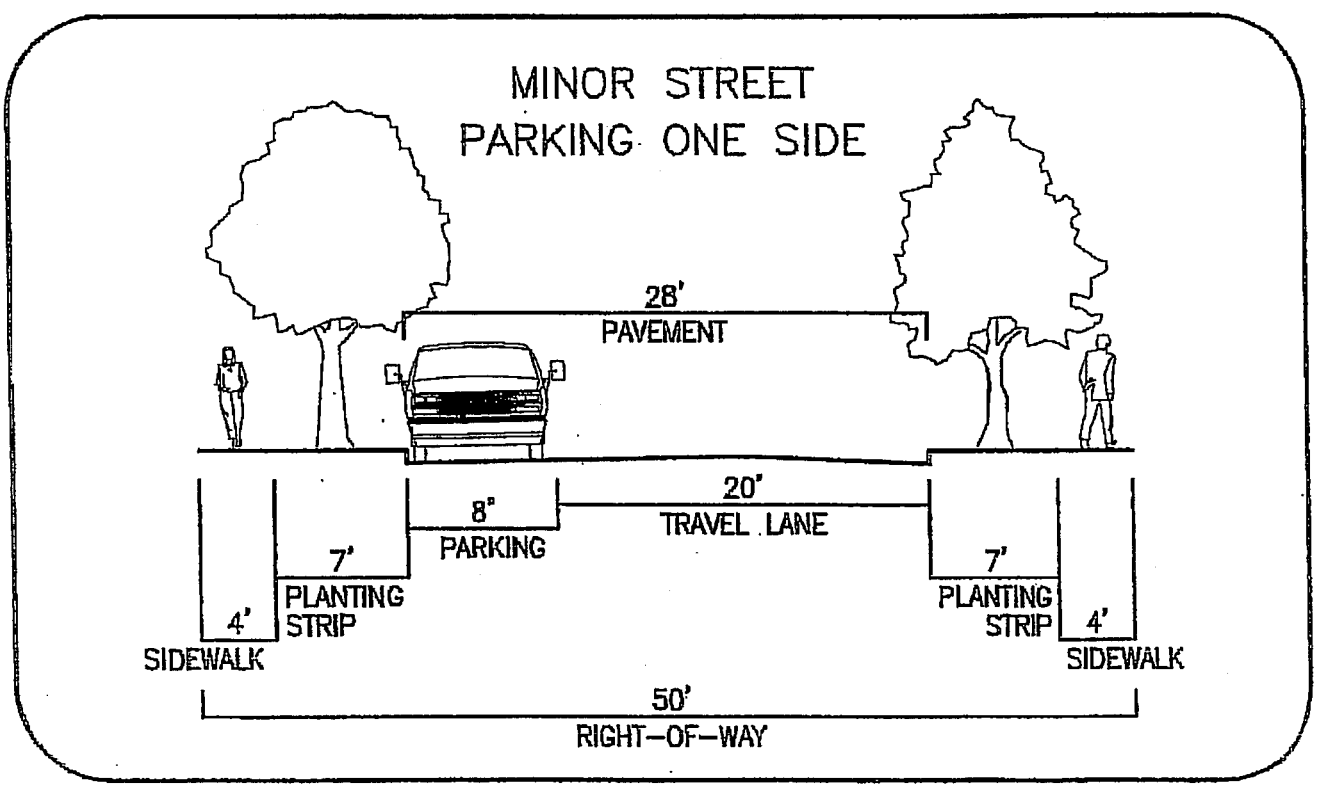

NOTE:
ALL PLANTING STRIPS INCLUDE 8" WIDE CURB

22-128	SCALE: NOT TO SCALE	READING TOWNSHIP
	DATE: 10/20/03	TYPICAL ROADWAY DETAILS

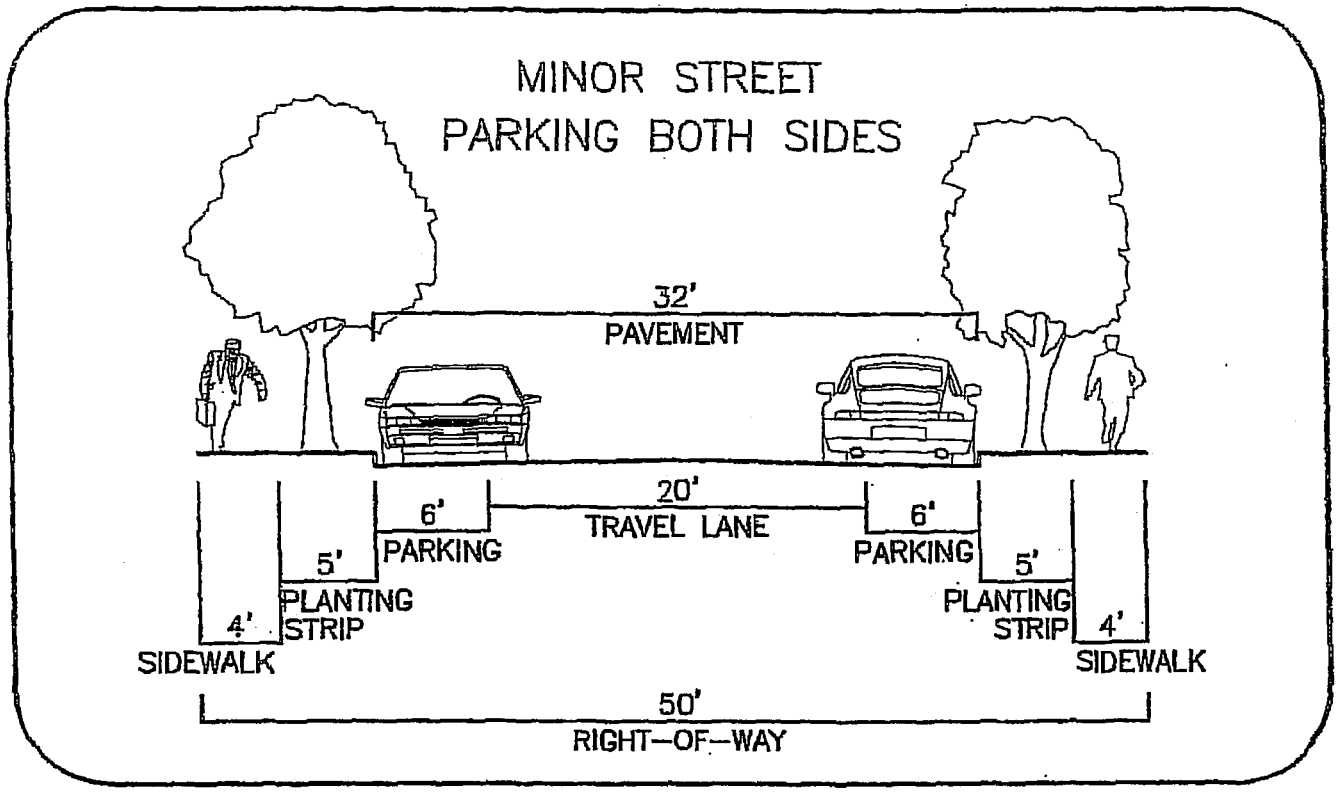

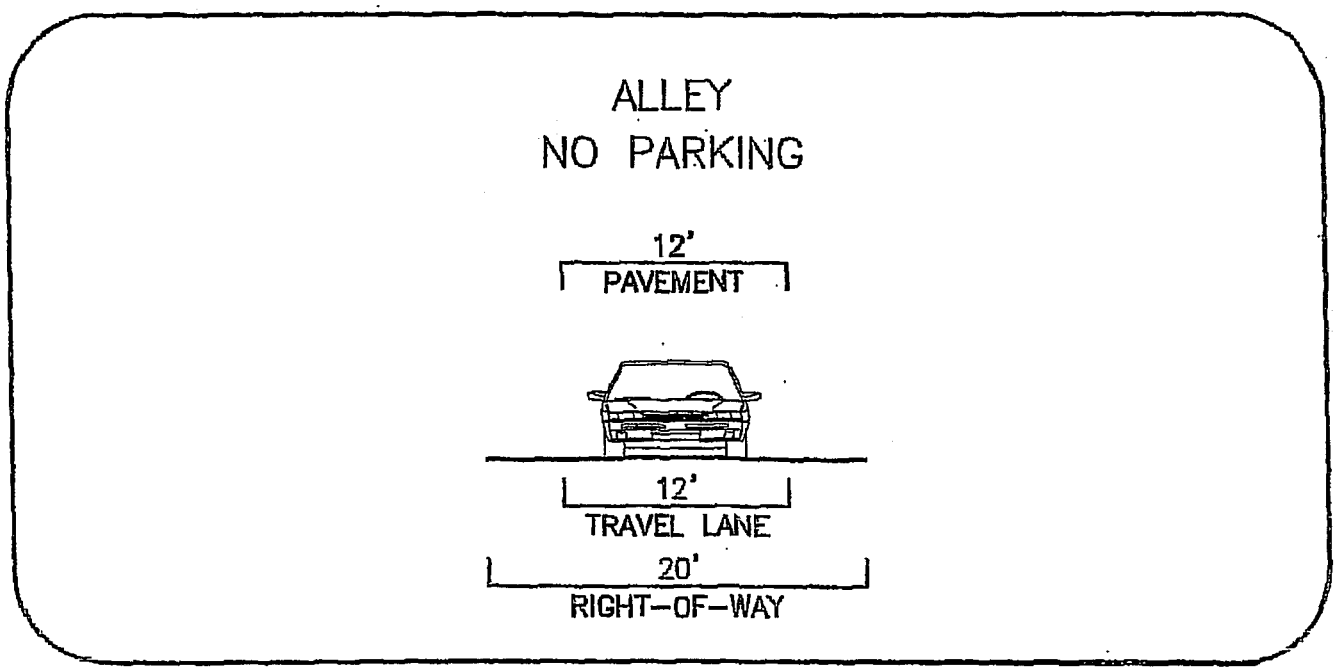

NOTE:
ALL PLANTING STRIPS INCLUDE 8" WIDE CURB

22-129	SCALE: NOT TO SCALE	READING TOWNSHIP
	DATE: 10/20/03	TYPICAL ROADWAY DETAILS

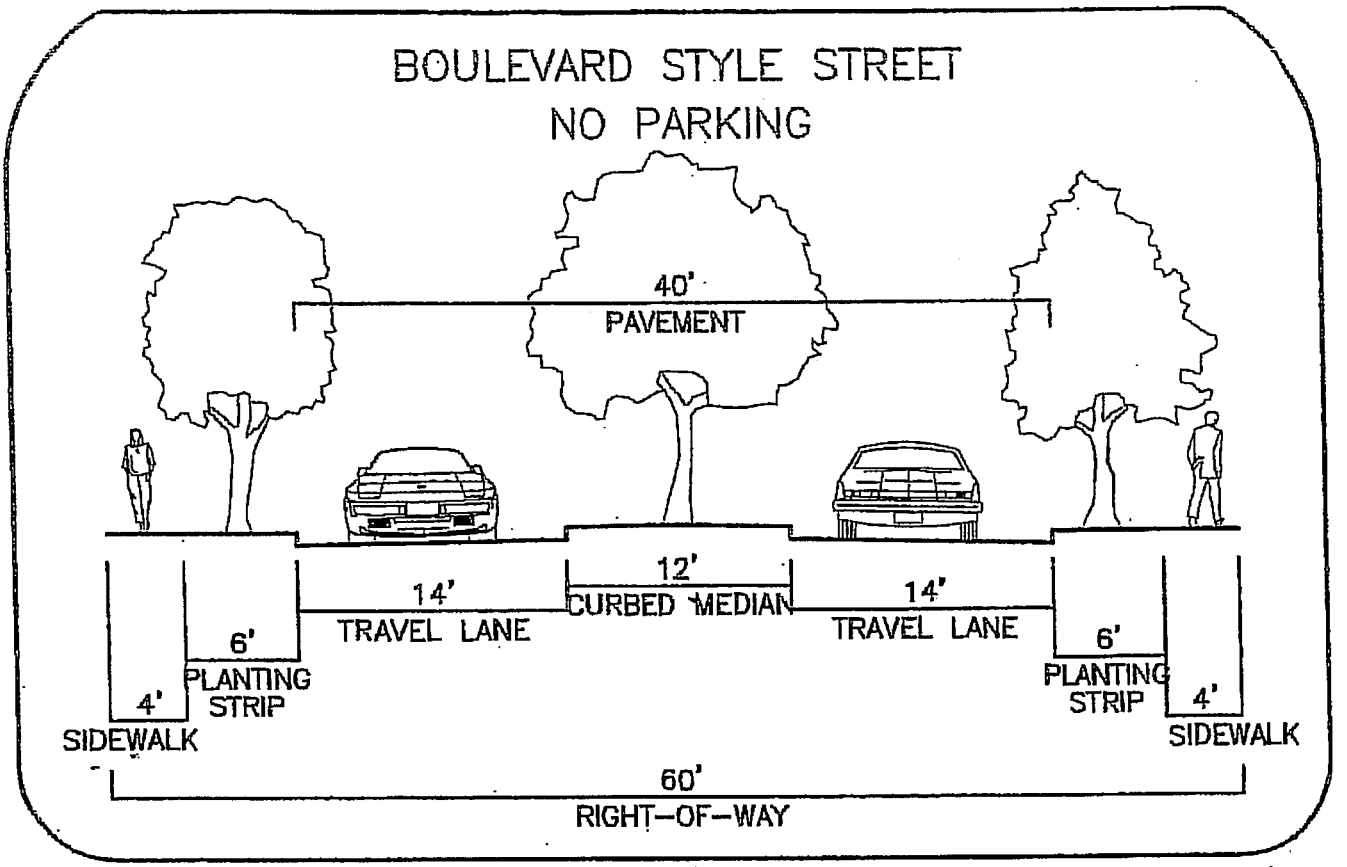

NOTE:
ALL PLANTING STRIPS INCLUDE 8" WIDE CURB

SCALE: NOT TO SCALE	READING TOWNSHIP
DATE: 10/20/03	TYPICAL ROADWAY DETAILS